23. '80 ADDENDUM

INTRODUCTION

This Honda Shop Manual addendum contains information for the 1980 CX500 DELUXE and CX500 CUSTOM.

Refer to the base Shop Manual for service procedures and data not included in this addendum.

ALL INFORMATION, ILLUSTRATIONS, DIRECTIONS AND SPECIFICATIONS INCLUDED IN THIS PUBLICATION ARE BASED ON THE LATEST PRODUCT INFORMATION AVAILABLE AT THE TIME OF APPROVAL FOR PRINTING. HONDA MOTOR CO., LTD. RESERVES THE RIGHT TO MAKE CHANGES AT ANY TIME WITHOUT NOTICE AND WITHOUT INCURRING ANY OBLIGATION WHATEVER. NO PART OF THIS PUBLICATION MAY BE REPRODUCED WITHOUT WRITTEN PERMISSION.

HONDA MOTOR CO., LTD.
Service Publications Office

TABLE OF CONTENTS

1. GENERAL INFORMATION 23– 2
SPECIFICATIONS 23– 2
MAINTENANCE SCHEDULE 23– 4
CABLE & HARNESS ROUTING 23– 5
2. LUBRICATION 23– 6
ENGINE OIL LUBRICATION 23– 6
CABLE LUBRICATION 23– 6
3. INSPECTION AND ADJUSTMENT .. 23– 6
SPARK PLUG 23– 6
4. FUEL SYSTEM 23– 7
CARBURETOR SPECIFICATIONS .. 23– 7
SEPARATION AND ASSEMBLY ... 23– 7
ACCELERATOR PUMP INSPECTION 23– 8
ACCELERATOR PUMP ADJUSTMENT 23– 8
PILOT SCREW REMOVAL/ INSTALLATION 23– 9
PILOT SCREW ADJUSTMENT 23– 9
IDLE LIMITER INSTALLATION ... 23–10
5. WIRING DIAGRAM 23–11

Date of Issue: January, 1981
© HONDA MOTOR CO., LTD.

1. GENERAL INFORMATION

SPECIFICATIONS

ITEM				SPECIFICATIONS	
				CX500 DELUXE	CX500 CUSTOM
DIMENSIONS	Overall length			2,185 mm (86.0 in)	2,150 mm (84.6 in)
	Overall width			865 mm (34.1 in)	875 mm (34.4 in)
	Overall height			1,165 mm (45.9 in)	1,170 mm (46.1 in)
	Wheelbase			1,455 mm (57.3 in)	1,455 mm (57.3 in)
	Seat height			800 mm (31.5 in)	790 mm (31.1 in)
	Foot peg height			335 mm (13.2 in)	325 mm (12.8 in)
	Ground clearance			145 mm (5.7 in)	145 mm (5.7 in)
	Dry weight			205 kg (452 lb)	202 kg (445 lb)
FRAME	Type			Diamond	
	Front suspension, travel			Telescopic fork, 139.5 mm (5.5 in)	
	Rear suspension, travel			Swingarm, 85 mm (3.3 in)	
	Front tire size			3.50S19-4PR	
	Rear tire size			130/90-16 67S	
	Cold tire pressures	Up to 90 kg (200 lbs) load	Front	2.0 kg/cm^2 (28 psi)	
			Rear	2.0 kg/cm^2 (28 psi)	
		Up to vehicle capacity load	Front	2.0 kg/cm^2 (28 psi)	
			Rear	2.25kg/cm^2 (32 psi)	
	Front brake, lining swept area			Disc brake, 600 cm^2 (93.0 sq in)	
	Rear brake, lining swept area			Internal expanding shoes, 201 cm^2 (31.2 sq in)	
	Fuel capacity			17 liters (4.5 US gal) 3.5 liters (0.9 US gal)	11 liters (2.9 US gal) 2.5 liters (0.7 US gal)
	Caster angle			63°15'	
	Trail			105 mm (3.9 in)	
	Front fork oil capacity			135 cc (4.7 ozs) After assembly	
ENGINE	Type			Liquid cooled 4-stroke OHV	
	Cylinder arrangement			2 cylinder transverse V	
	Bore and stroke			78 x 52 mm (3.07 x 2.04 in)	
	Displacement			496 cc (30.3 cu in)	
	Compression ratio			10 : 1	
	Valve train			Silent chain driven camshaft and push rod	
	Oil capacity			3.0 liters (3.2 US qt)	
	Lubrication system			Forced pressure and wet sump	
	Cooling system capacity			2.0 liters (0.52 US gal)	
	Air filtration			Paper	
	Cylinder compression			12 kg/cm^2 (171 psi)	
	Intake valve	Opens		6° BTDC (at 1 mm lift), 79° BTDC (at 0 lift)	
		Closes		46° ABDC (at 1 mm lift), 123° ABDC (at 0 lift)	
	Exhaust	Opens		46° BBDC (at 1 mm lift), 114° BBDC (at 0 lift)	
		Closes		6° ATDC (at 1 mm lift), 85° ATDC (at 0 lift)	
	Valve clearance			IN: 0.08 mm (0.003 in) EX: 0.10 mm (0.004 in)	
	Engine weight			65 kg (143.3 lb)	
	Idle speed			1,100 ± 100 rpm	

Date of Issue: August, 1979
©HONDA MOTOR CO., LTD.

ITEM		SPECIFICATIONS	
		CX500 DELUXE	CX500 CUSTOM
CARBURETION	Carburetor type	CV 34 mm (1.3 in)	
	Identification number	VB28A	VB25A
	Pilot screw	See page 23–9	
	Float level	15.5 ± 1 mm (0.61 ± 0.04 in)	
DRIVE TRAIN	Clutch	Wet, multi-plate	
	Transmission	5-speed, constant-mesh	
	Primary reduction	2.242	
	Gear ratio I	2.733	
	Gear ratio II	1.850	
	Gear ratio III	1.416	
	Gear ratio IV	1.148	
	Gear ratio V	0.931	
	Final reduction	3.091 (11/34)	
	Gear shift pattern	Left foot operated return system 1-N-2-3-4-5	
ELECTRICAL	Ignition	CDI	
	Ignition timing "F" mark	15° BTDC/1,100 ± 100 rpm	
	Full advance	37° ± 3° BTDC	
	RPM from "F" to full advance	1,750–6,000 rpm	
	Starting system	Starting motor only	
	Generator	Three phase A.C. generator 170W/5,000 rpm	
	Battery capacity	12V–14AH	
	Spark plug		

	For cold climate below 5°C (41°F)		Standard		For extended high speed riding	
USA model	ND X22ES–U	NGK D7EA	ND X24ES–U	NGK D8EA	ND X27ES–U	NGK D9EA
Canadian model	X22ESR –U	DR7ES	X24ESR –U	DR8ES –L	X27ESR –U	DR8ES

	Spark plug gap	0.6–0.7 mm (0.024–0.028 in)
	Fuse	20A (main), 10A (sub)
LIGHTS	Headlight (high/low beam)	65/50W sealed beam
	Tail/stoplight	8/27W (3/32 cp SAE NO. 1157)
	Turn signal light (front/rear)	23/23W (32/32 cp SAE NO. F. 1034, R. 1073)
	Speedometer light	3.4W (2 cp SAE NO. 57)
	Tachometer light	3.4W (2 cp SAE NO. 57)
	Neutral indicator	3.4W (2 cp SAE NO. 57)
	Turn signal indicator	3.4W (2 cp SAE NO. 57)
	High beam indicator	3.4W (2 cp SAE NO. 57)
	Running light	8W (3 cp SAE NO. 1034)

©HONDA MOTOR CO., LTD.

MAINTENANCE SCHEDULE DELUXE AND CUSTOM

Perform the PRE-RIDE INSPECTION in the Owner's Manual at each scheduled maintenance.

I : INSPECT AND CLEAN, ADJUST, LUBRICATE OR REPLACE IF NECESSARY.
C: CLEAN
R: REPLACE
A: ADJUST
L: LUBRICATE

		FREQUENCY / ITEM	WHICHEVER COMES FIRST ↓ EVERY	ODOMETER READING [NOTE 3] 600 mi. (1,000 km)	3,750 mi. (6,000 km)	7,500 mi. (12,000 km)	11,250 mi. (18,000 km)	15,000 mi. (24,000 km)	18,750 mi. (30,000 km)	22,500 mi. (36,000 km)	REFER TO
EMISSION RELATED ITEMS	*	FUEL LINES				I		I		I	Page 3– 3
	*	THROTTLE OPERATION		I		I		I		I	Page 3– 5
	*	CARBURETOR-CHOKE				I		I		I	Page 3– 6
		AIR CLEANER	NOTE 1		C	R	C	R	C	R	Page 3– 2
		CRANKCASE BREATHER	NOTE 2		C	C	C	C	C	C	Page 3– 3
		SPARK PLUGS			R	R	R	R	R	R	Page 23– 6
	*	VALVE CLEARANCE		I	I	I		I		I	Page 3– 4
		ENGINE OIL	YEAR	R		R		R		R	Page 2– 2, 23– 6
		ENGINE OIL FILTER	YEAR	R		R		R		R	Page 2– 2
	*	CAM CHAIN TENSION		A	A	A	A	A	A	A	Page 3– 5
	*	CARBURETOR-SYNCHRONIZE		I		I		I		I	Page 3– 7
	*	CARBURETOR-IDLE SPEED		I	I	I	I	I	I	I	Page 3– 6
	*	RADIATOR COOLANT				I		I		R	Page 3– 8, 9– 3
	*	RADIATOR CORE				I		I		I	Page 3– 8
	*	COOLING SYSTEM, HOSES & CONNECTIONS		I		I		I		I	Page 3– 8
NON-EMISSION RELATED ITEMS	*	DRIVE SHAFT JOINT				L		L		L	Page 2– 3
	*	FINAL DRIVE LUBRICANT				I		I		R	Page 2– 3
		BATTERY	MONTH	I	I	I	I	I	I	I	Page 3– 9
		BRAKE FLUID (FRONT)	MONTH 2 YEARS *R	I	I	I	I	I	I	*R	Page 3– 9
		BRAKE SHOE/PAD WEAR			I	I	I	I	I	I	Page 3–11
		BRAKE SYSTEM (REAR)		I		I		I		I	Page 3–11
	*	BRAKE LIGHT SWITCH		I		I		I		I	Page 3–12
	*	HEADLIGHT AIM		I		I		I		I	Page 3–13
		CLUTCH		I	I	I	I	I	I	I	Page 3–13
		SIDE STAND				I		I		I	Page 3–14
	*	SUSPENSION		I		I		I		I	Page 3–14
	*	NUTS, BOLTS, FASTENERS		I		I		I		I	Page 3–15
	**	WHEELS		I		I		I		I	Page 3–15
	**	STEERING HEAD BEARING		I		I		I		I	Page 3–15

* SHOULD BE SERVICED BY AN AUTHORIZED HONDA DEALER, UNLESS THE OWNER HAS PROPER TOOLS AND SERVICE DATA AND IS MECHANICALLY QUALIFIED.

** IN THE INTEREST OF SAFETY, WE RECOMMEND THESE ITEMS BE SERVICED ONLY BY AN AUTHORIZED HONDA DEALER.

NOTE:
1. Service more frequently when riding in dusty areas.
2. Service more frequently when riding in rain or at full throttle, or after being washed or overturned.
3. For higher odometer readings, repeat at the frequency interval established here.

Date of Issue: January, 1981
© HONDA MOTOR CO., LTD.

CABLE & HARNESS ROUTING

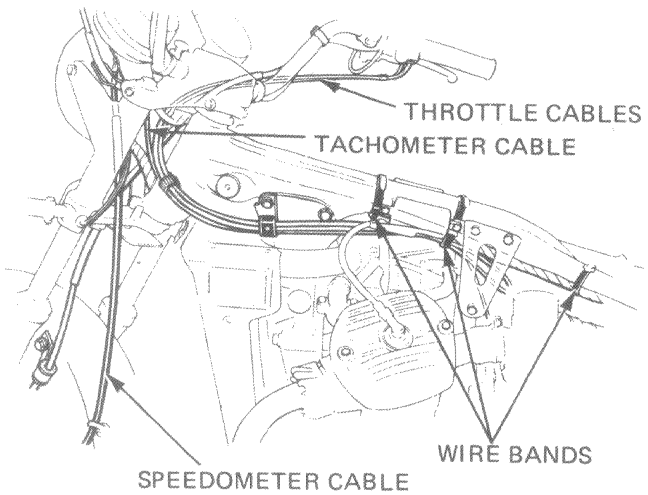

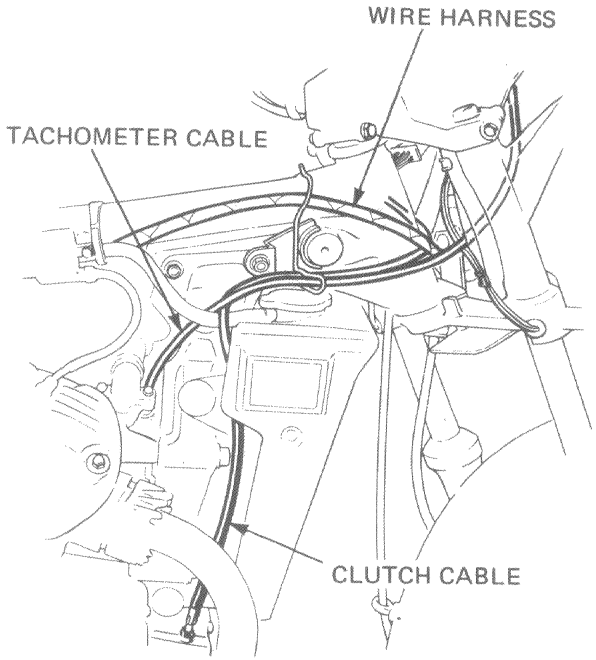

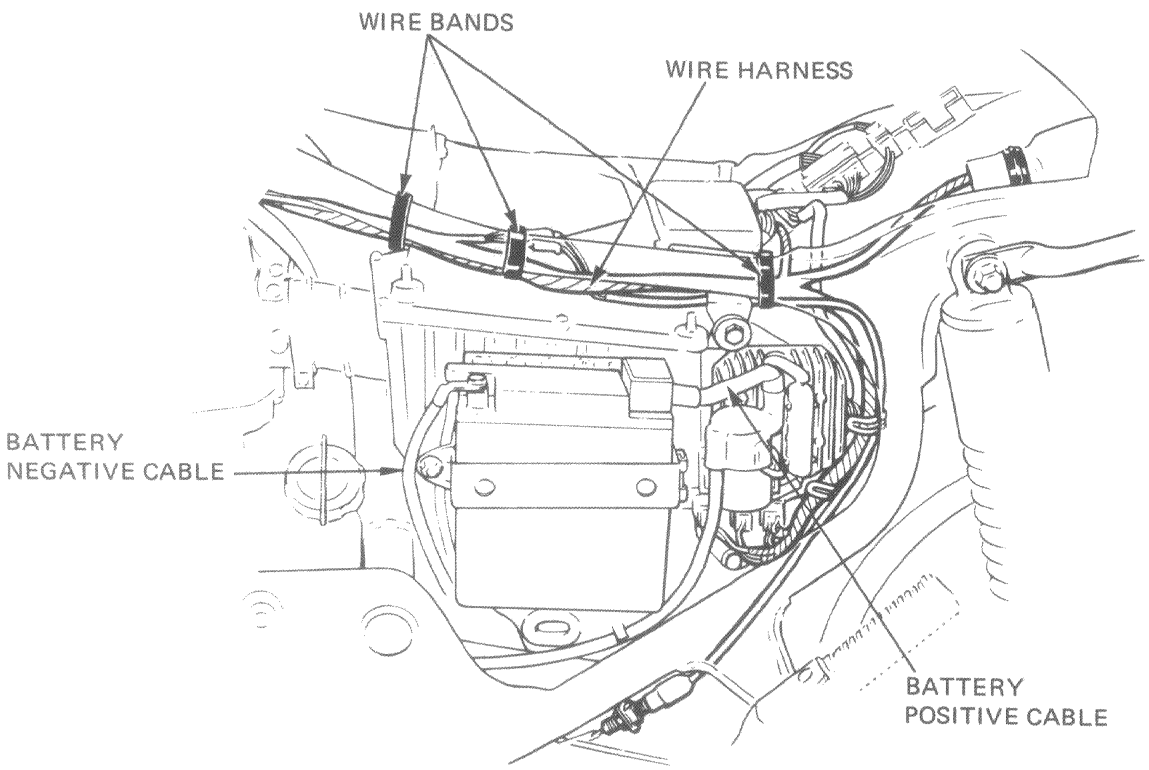

©HONDA MOTOR CO., LTD.

2. LUBRICATION

ENGINE OIL RECOMMENDATION

Use HONDA 4-STROKE OIL or equivalent.
API SERVICE CLASSIFICATION: SE
VISCOSITY: SAE 10W–40
Other viscosities shown in the chart may be used when the average temperature in your riding area is within the indicated range

OIL VISCOSITIES

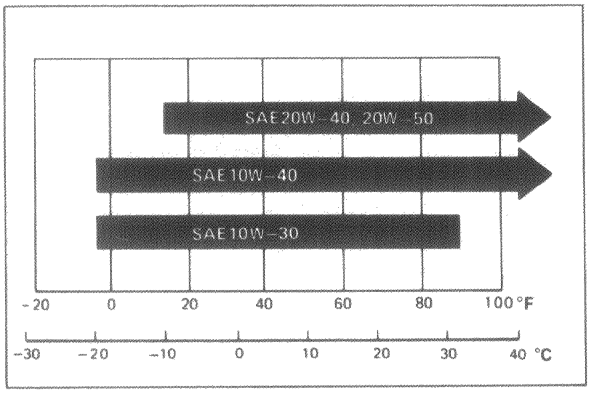

CABLE LUBRICATION

Lubricate the clutch, choke and throttle cables with a commercially available cable lubricant to prevent premature wear and corrosion.

3. INSPECTION AND ADJUSTMENT

SPARK PLUG

Disconnect the spark plug caps.
Clean any dirt from around the spark plug base.
Remove and discard the spark plugs.
Check the new spark plug gaps with a wire type feeler gauge.
If adjustment is necessary, bend the side electrode carefully.

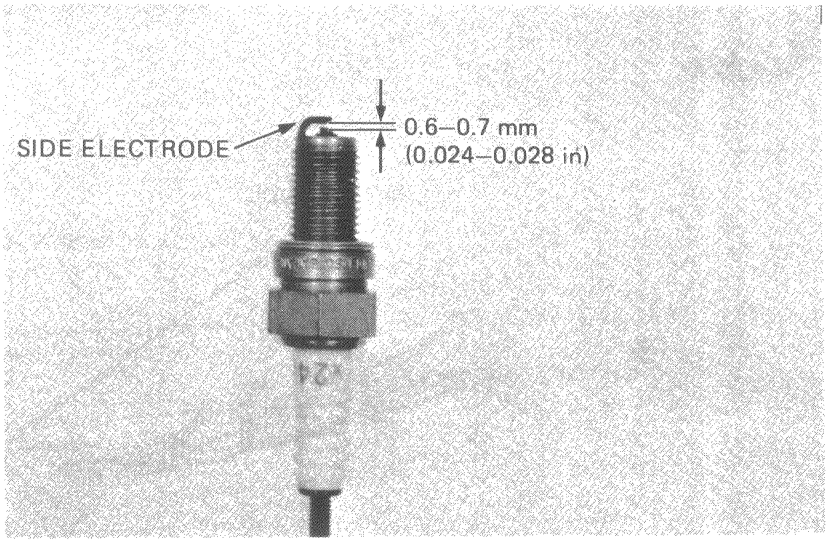

SPARK PLUG GAP:
0.6–0.7 mm (0.024–0.028 in)

With the plug washers attached, thread the new spark plugs in by hand to prevent crossthreading.
Tighten the spark plugs 1/2 turn with a spark plug wrench.
Install the spark plug caps.

RECOMMENDED SPARK PLUG:

	For cold climate below 5°C (41°F)		Standard		For extended high speed riding	
USA model	ND	NGK	ND	NGK	ND	NGK
	X22ES–U	D7EA	X24ES–U	D8EA	X27ES–U	D9EA
Canadian model	X22ESR–U	DR7ES	X24ESR–U	DR8ES–L	X27ESR–U	DR8ES

Date of Issue: January, 1981
© HONDA MOTOR CO., LTD.

4. FUEL SYSTEM

GENERAL INFORMATION

- The CX500 carburetor bore size has been changed to 34 mm (1.3 in).
- An accelerator pump circuit has been added.
- See Caution and Note under Pilot Screw Removal and Pilot Screw Adjustment (Page 23-10).

CARBURETOR SPECIFICATIONS

	CX500 DELUXE	CX500 CUSTOM
Identification mark	VB28A	VB25A
Idle speed	1,100 ± 100 rpm	←
Fast idle speed	1,000 – 1,500 rpm	←
Float level	15.5 ± 1 mm	←
Pilot screw	See page 23–9	←
Bore	34 mm	←
Main jet	Primary #78	←
	Secondary #115	←

CARBURETOR SEPARATION

Remove the carburetors (Page 4-2).
Separate the carburetors (Page 4-3), noting that the accelerator pump joint pipe must be removed.

ASSEMBLY

Install a new O-ring on each end of the accelerator pump and fuel joint pipes.
Assemble the right and left carburetors noting the compression spring location.
Install the front and rear stays.
Refer to page 4-9 for carburetor installation.

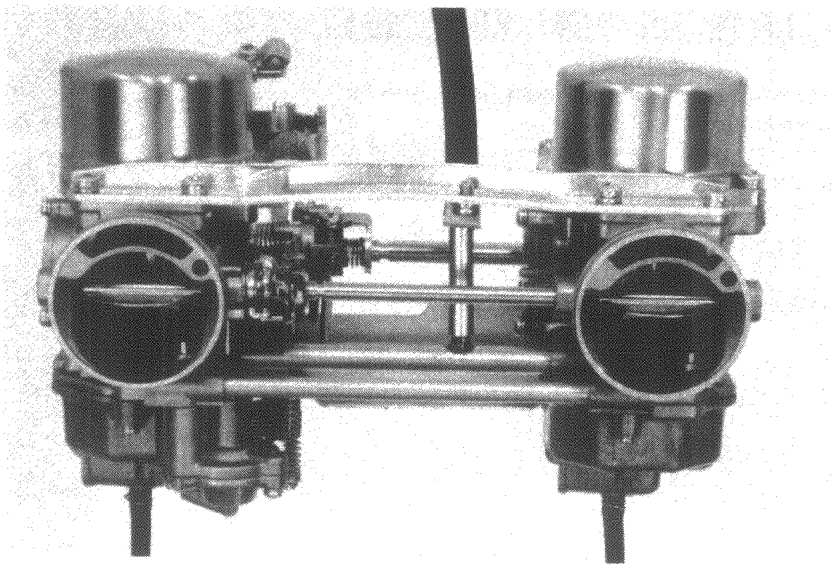

©HONDA MOTOR CO., LTD.

ACCELERATOR PUMP INSPECTION

Remove the accelerator pump by unscrewing the setting screw.

Remove the accelerator pump cover and spring.

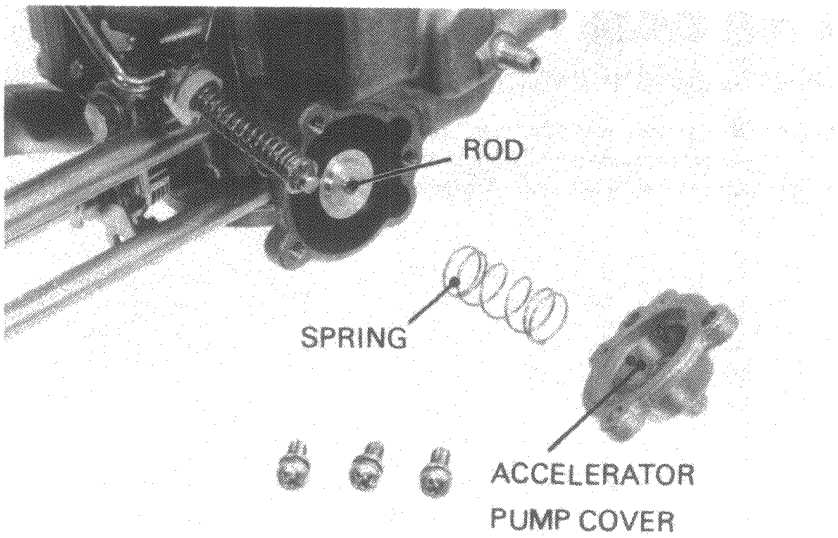

Remove the diaphragm.
Inspect the diaphragm for cracks and brittleness.
Replace if necessary.
Be sure the accelerator rod is not bent.

Assemble the accelerator pump in the reverse order of disassembly.

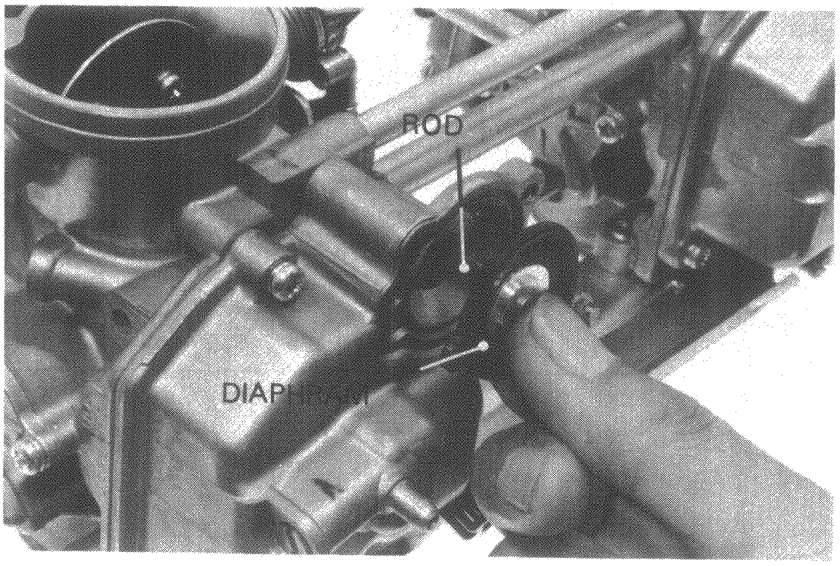

ACCELERATOR PUMP ADJUSTMENT

Loosen the throttle stop screw, so the throttle valve is closed.
Measure the clearance between the accelerator pump rod and the adjusting arm with the throttle valve closed.

CLEARANCE: 0.1–0.3 mm (0.004–0.012 in)

Adjust by bending the adjusting arm.

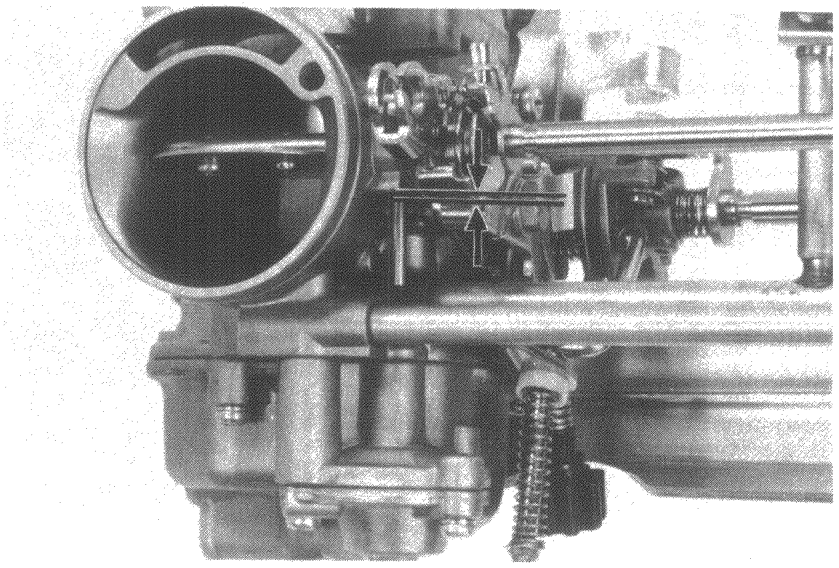

Date of Issue: August, 1979
©HONDA MOTOR CO., LTD.

Measure the clearance between the adjusting arm and stopper on the carburetor.

CLEARANCE: 3.1–3.3 mm (0.12–0.13 in)

Adjust by bending the adjusting arm.

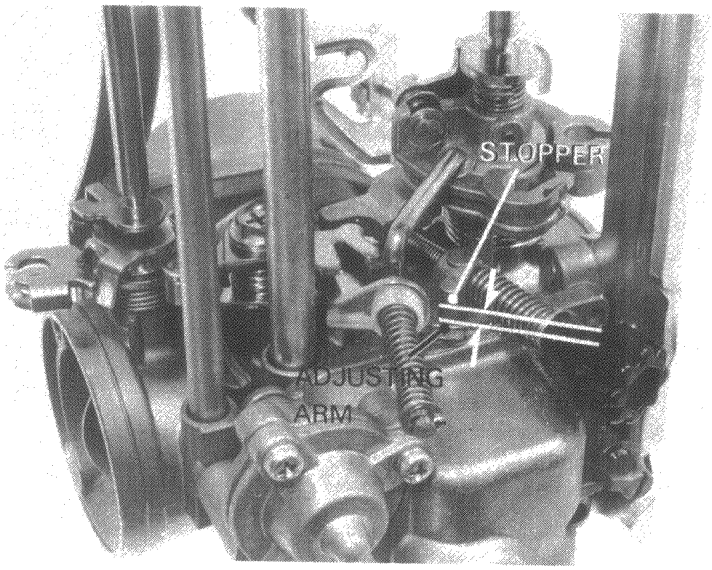

PILOT SCREW REMOVAL/ INSTALLATION

NOTE

> The pilot screws are factory pre-set and should not be removed unless the carburetors are overhauled.

CAUTION

> *Any forcible attempt to remove the pilot screw limiter caps will cause screw breakage.*

Remove the carburetors (page 4-2).
Remove the float chamber (page 4-6).

Turn the pilot screw in and carefully count the number of turns before it seats lightly. Make a note of this to use as a reference when reinstalling the pilot screws.

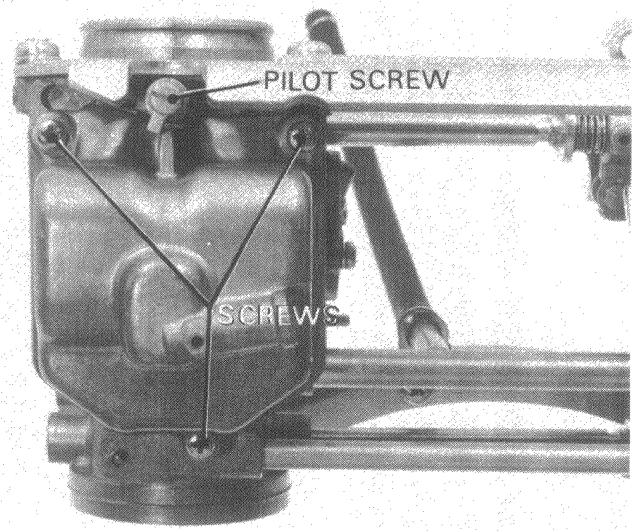

CAUTION

> *Damage to the pilot screw seat will occur if the pilot screw is tightened against the seat.*

Remove the pilot screw.
Inspect the pilot screw for wear and replace if necessary.
Install the pilot screw and turn it to the original position, as noted during removal.
Perform pilot screw adjustment if a new pilot screw is installed. (See below)

NOTE

> Do not install limiter caps on new pilot screws until after adjustment has been made (See page 23-11).

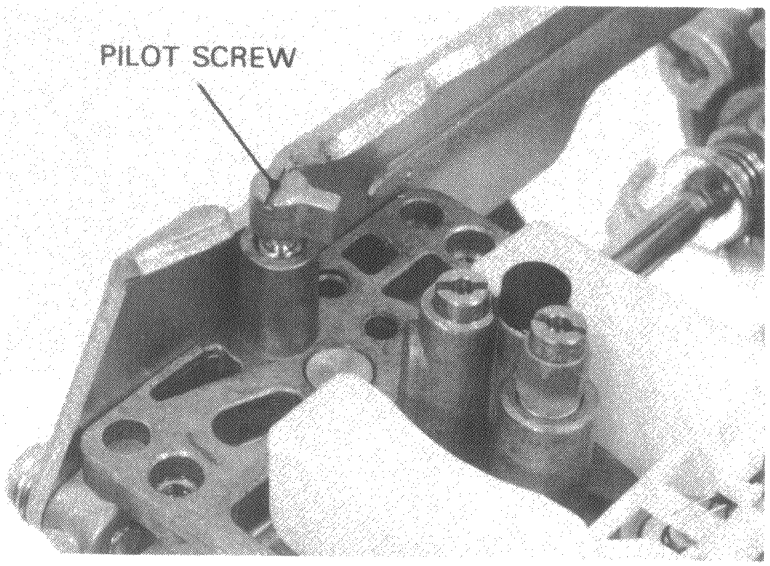

PILOT SCREW ADJUSTMENT

Adjust the pilot screws (page 4-10), using 1-3/4 turns as the pilot screw initial opening.

©HONDA MOTOR CO., LTD.

IDLE LIMITER INSTALLATION

After adjustment, cement the limiter caps over the pilot screws, using LOCTITE® #601 or equivalent. The limiter cap should be placed against its stop, preventing further adjustment that would enrich the fuel mixture (limiter cap position permits clockwise rotation and prevents counterclockwise rotation).

NOTE

- Do not turn the pilot screws when installing the limiter caps.
- Pilot screw limiter caps must be installed. They prevent misadjustment that could cause poor performance and increase exhaust emissions.

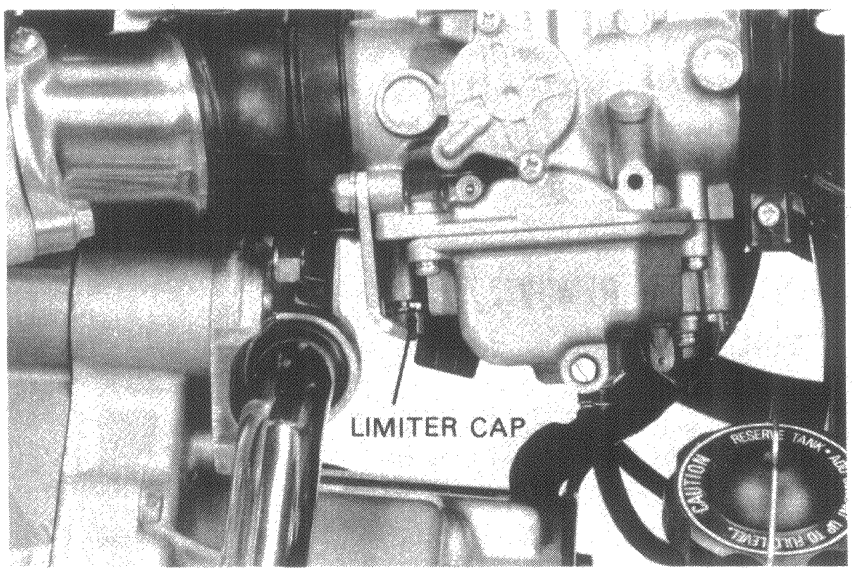

Date of Issue: January, 1981
© HONDA MOTOR CO., LTD.

5. WIRING DIAGRAM CX500 DELUXE

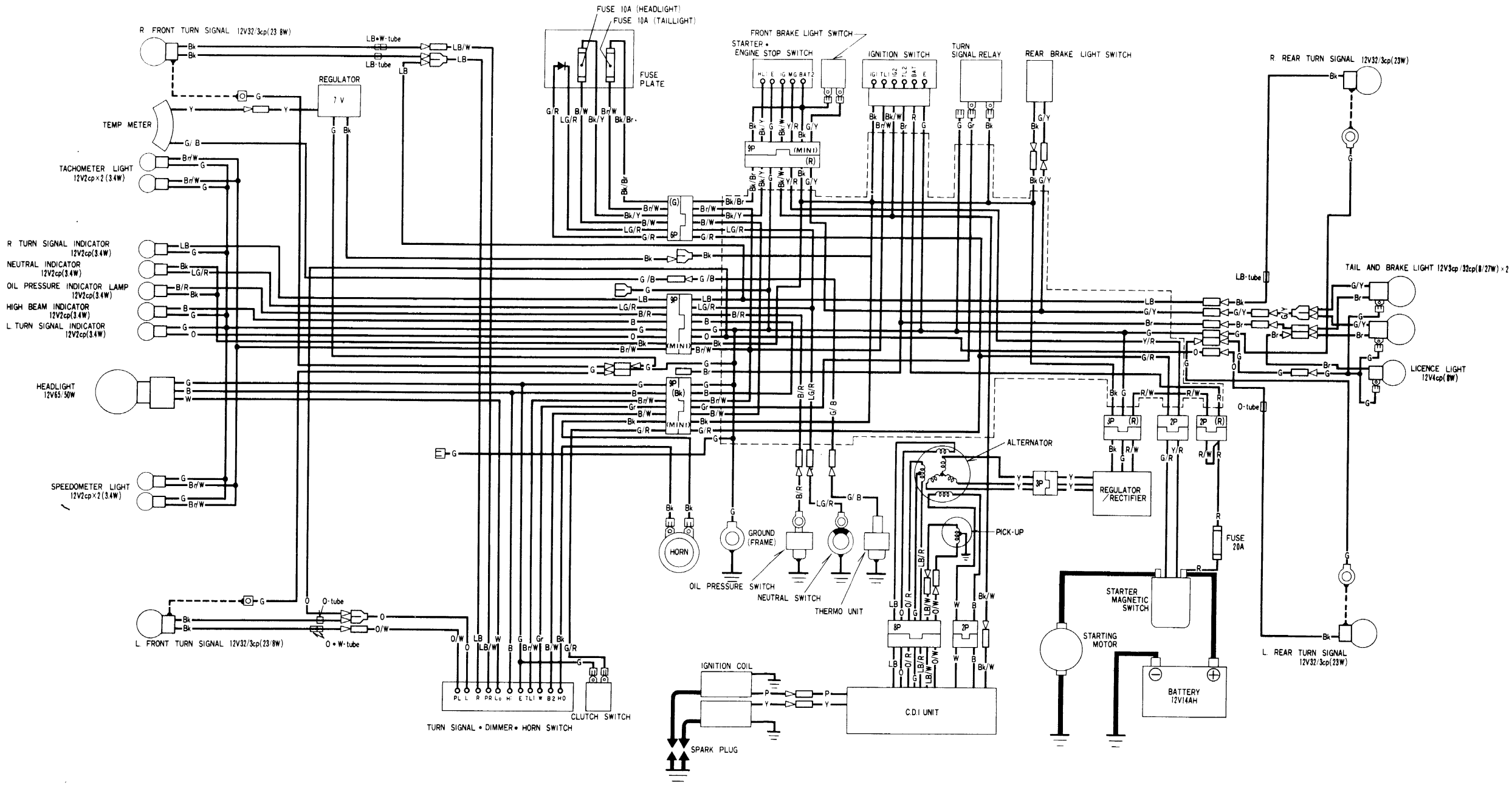

IGNITION SWITCH CONTINUITY

	E	IG2	BAT	IG1	TL1	TL2
OFF	○	○				
ON			○	○	○	○
P	○	○	○			○
LOCK						

STARTER • ENGINE STOP SWITCH CONTINUITY

ENGINE STOP SWITCH			STARTER SWITCH			
	IG	E		MAG	BAT2	HL1
OFF	○	○	FREE		○	○
RUN			PUSH	○	○	
OFF	○	○				

TURN SIGNAL • DIMMER • HORN SWITCH CONTINUITY

DIMMER SWITCH				HORN SWITCH			TURN SIGNAL SWITCH						
	B2	Lo	Hi		HO	E		W	R	L	TL1	PR	PL
Lo	○	○		FREE			R	○	○		○	○	○
(N)	○	○	○	PUSH	○	○	N				○	○	○
Hi	○	○	○				L	○	○	○	○	○	

Br	Brown	Y	Yellow
Bk	Black	B	Blue
W	White	Gr	Grey
LG	Light Green	LB	Light Blue
R	Red	O	Orange
G	Green	P	Pink

0030Z-470-6700

©HONDA MOTOR CO., LTD.

CX500 CUSTOM

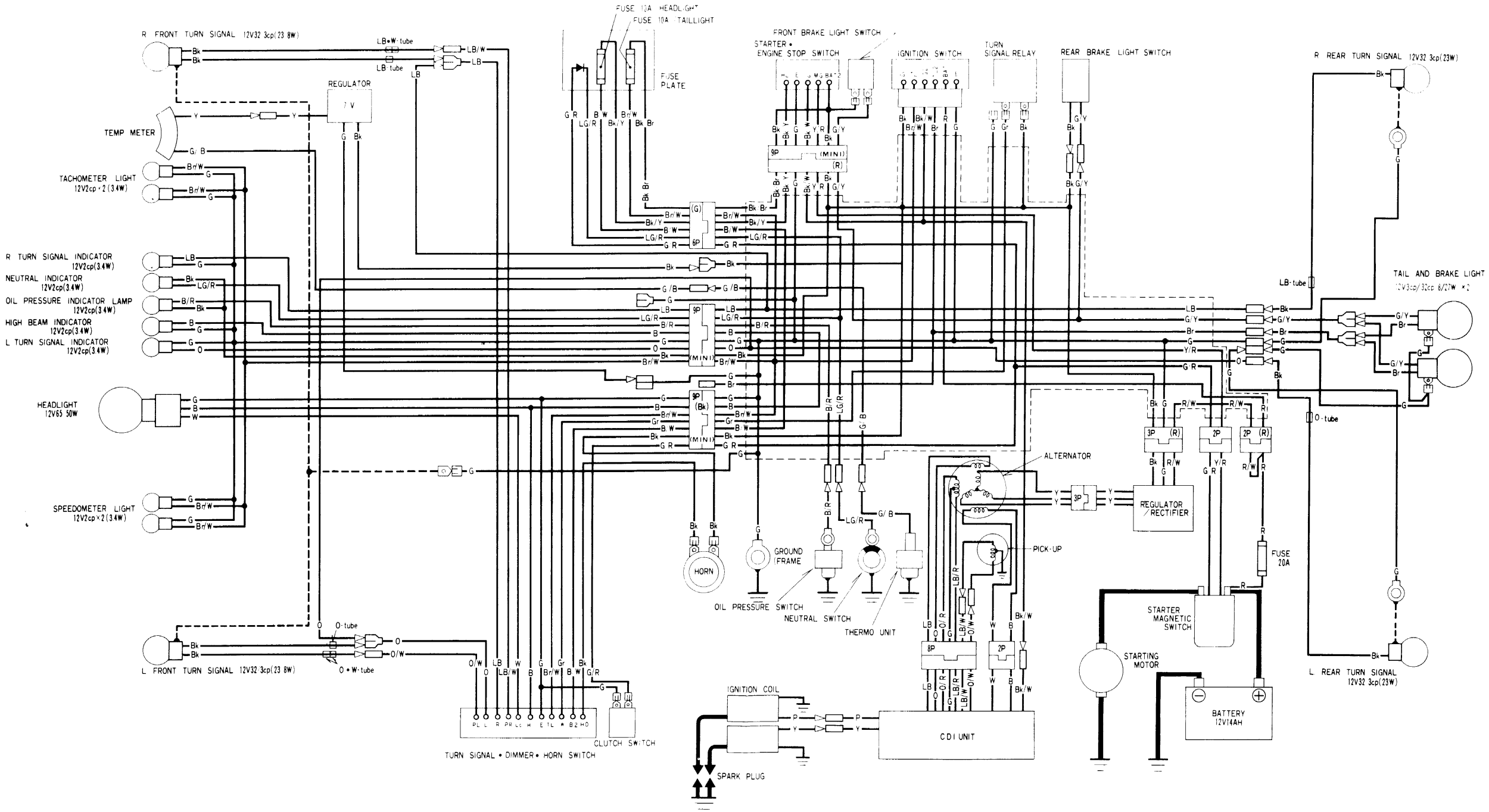

IGNITION SWITCH CONTINUITY

	E	IG2	BAT	IG1	TL1	TL2
OFF	○—○					
ON			○—○		○—○	
P	○—○		○		———	○
LOCK						

STARTER•ENGINE STOP SWITCH CONTINUITY

ENGINE STOP SWITCH			STARTER SWITCH			
	IG	E		MAG	BAT2	HL1
OFF	○—○		FREE		○—○	
RUN			PUSH	○—○		
OFF	○—○					

TURN SIGNAL • DIMMER • HORN SWITCH CONTINUITY

DIMMER SWITCH				HORN SWITCH			TURN SIGNAL SWITCH					
	B2	Lo	Hi		HO	E		W	R	L	TL1	PR	PL
Lo	○—○			FREE			R	○—○			○	———	○
N	○—○	○—○		PUSH	○—○		N				○—○	○—○
Hi	○	———	○				L	○		○	○—○	

Br	Brown	Y	Yellow
Bk	Black	B	Blue
W	White	Gr	Grey
LG	Light Green	LB	Light Blue
R	Red	O	Orange
G	Green	P	Pink

0030Z—449—7700

Date of Issue: August, 1979
©HONDA MOTOR CO., LTD.