E01	Radiator, Cooling Fan I
E0101	Radiator, Cooling Fan II
E02	Thermostat, Water Pipe
E03	Cylinder Head Cover
E04	Right Cylinder Head
E05	Left Cylinder Head
E06	Valve, Upper Rocker Arm
E07	Camshaft, Lower Rocker Arm
E08	Clutch Cover, Oil Filter
E09	Transmission Cover
E10	Clutch
E11	Oil Pump, Primary Drive Gear
E12	Water Pump, CDI Pulser
E13	Starter Motor
E14	Rear Cover
E15	Alternator
E16	Cam Chain, Tensioner
E17	Final Shaft
E18	Cylinder Block
E19	Crankshaft, Piston
E20	Transmission
E21	Shift Drum
E22	Carburetor

F01	Headlight I
F0101	Headlight II
F02	Headlight Case
F03	Speedometer, Tachometer I
F0301	Speedometer, Tachometer II
F04	Handle Lever, Switch, Cable
F05	Front Master Cylinder I
F0501	Front Master Cylinder II
F06	Handle Bar, Top Bridge, Key Set
F07	Steering Stem, Horn
F08	Front Fender
F09	Front Fork
F10	Front Brake Caliper
F11	Front Wheel, Disc
F12	Rear Brake Panel
F13	Rear Wheel
F14	Final Drive Gear
F15	Fuel Tank I
F1501	Fuel Tank II
F16	Seat
F17	Side Cover, Battery
F18	Electric Plate, CDI Unit
F19	Air Cleaner
F20	Muffler
F21	Brake Pedal, Change Pedal
F22	Step
F23	Stand
F24	Swingarm
F25	Rear Shock Absorber
F26	Rear Fender I
F2601	Rear Fender II
F27	Turn Signal I
F2701	Turn Signal II
F28	Taillight I
F2801	Taillight II
F29	Wire Harness, Ignition Coil
F30	Radiator Shroud, Reserve Tank
F31	Frame
F32	Tools

E01

» OEM PARTS

<<-- Pick New Model

Change Assembly: Radiator @ Cooling Fan I

ZOOM IN ZOOM OUT

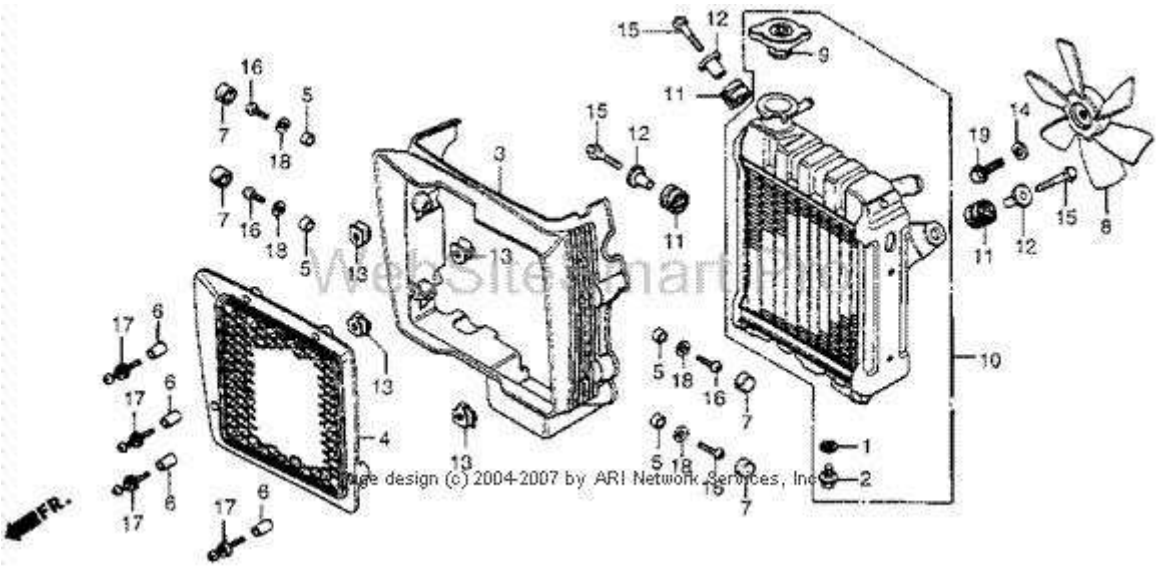

Tag	Description	Req	Price	
001	Gasket, Drain	1	$1.95	Add
002	Valve, Drain	1	$6.40	Add

003	Cover, Radiator(Not Available)	1	$105.28	Add
004	Grille, Radiator	1	$76.54	Add
005	Collar, Radiator Cover	4	$1.95	Add
006	Collar a, Grille(Not Available)	4	$1.95	Add
007	Grommet, Radiator Cover(Not Available)	4	$1.95	Add
008	Fan, Cooling	1	$31.54	Add
009	Cap, Radiator (Denso)	1	$11.56	Add
010	Radiator Assy	1	$363.72	Add
011	Rubber, Radiator Setting(Not Available)	3	$1.95	Add
012	Collar, Radiator Mounting(Not Available)	3	$4.32	Add
013	Nut, Glove Box(Source: Vintage Parts Inc.)	4	$4.10	Add
014	Washer, Plain (8.5x22x2.3)	1	$2.88	Add
015	Bolt, Cap (6x32)	3	$1.95	Add
016	Screw, Pan (6x12)	4	$1.95	Add
017	Screw-Washer (5x25)	4	$1.95	Add
018	Washer, Plain (6mm)	4	$1.95	Add
019	Bolt, Flange (8x25)	1	$1.95	Add

E0101

» OEM PARTS

<<-- Pick New Model

Change Assembly: Radiator @ Cooling Fan Ii

ZOOM IN ZOOM OUT ZOOM RESET

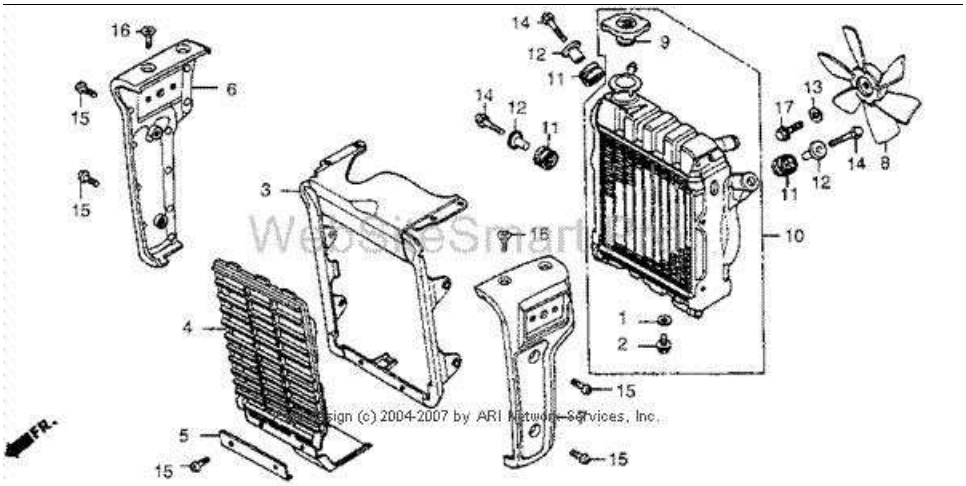

Tag	Description	Req	Price	
001	Gasket, Drain	1	$1.95 ea	Add to Cart
002	Valve, Drain	1	$6.40 ea	Add to Cart
003	Cover, Radiator	1	$122.12 ea	Add to Cart
004	Grille, Radiator(Not Available)	1	$66.85 ea	Add to Cart
005	Cover, Radiator (Lower)(Not Available)	1	$8.77 ea	Add to Cart
006	Plate, R. Side Radiator	1	$68.61 ea	Add to Cart
007	Plate, L. Side Radiator	1	$60.04 ea	Add to Cart
008	Fan, Cooling	1	$31.54 ea	Add to Cart
009	Cap, Radiator Filler	1	$44.13 ea	Add to Cart
010	Radiator Assy.(Not Available)	1	$371.38 ea	Add to Cart
011	Rubber, Radiator Setting(Not Available)	3	$1.95 ea	Add to Cart

012	Collar, Radiator Mounting(Not Available)	3	$5.02 ea	Add to Cart
013	Washer, Plain (8.5x22x2.3)	1	$2.88 ea	Add to Cart
014	Bolt, Cap (6x32)	3	$1.95 ea	Add to Cart
015	Screw, Pan (6x12)	6	$1.95 ea	Add to Cart
016	Screw, Flat (6x12)(Not Available)	4	$1.95 ea	Add to Cart
017	Bolt, Flange (8x25)	1	$1.95 ea	Add to Cart

Babbitts Sports Center
3712 Airline Rd.
Muskegon MI 49444
Phone: 231-737-4542
Email:
orderinfo@babbittsonline.com

Terms And Conditions | Privacy Policy
Powered by ARI Network Services - WebsiteSmart Pro v1.0.5
(c)2003-2007

E02

BABBITT'S ONLINE

ALL BRANDS HONDA SUZUKI KAWASAKI SEA-DOO POLARIS ARCTIC CAT CAN-AM

BABBITT'S ONLINE.COM

» View Cart » Checkout » Email: Parts | Sales » (231) 737-4542 »

OEM Parts | Accessories | Apparel | Aftermarket Parts | Contact Us | About Us | Boo

» Babbitt's Online Home
» Buy OEM Parts Online
» Buy Accessories Online
» New Vehicles
» Preowned Vehicles
» Company Info
» Maps / Hours
» Specials
» Financing
» View Cart
» Checkout

Search:
[Find Accessory] GO
enter sku or name and click "GO"

» OEM PARTS

<<-- Pick New Model

Change Assembly: Thermostat @ Water Pipe

ZOOM IN ZOOM OUT

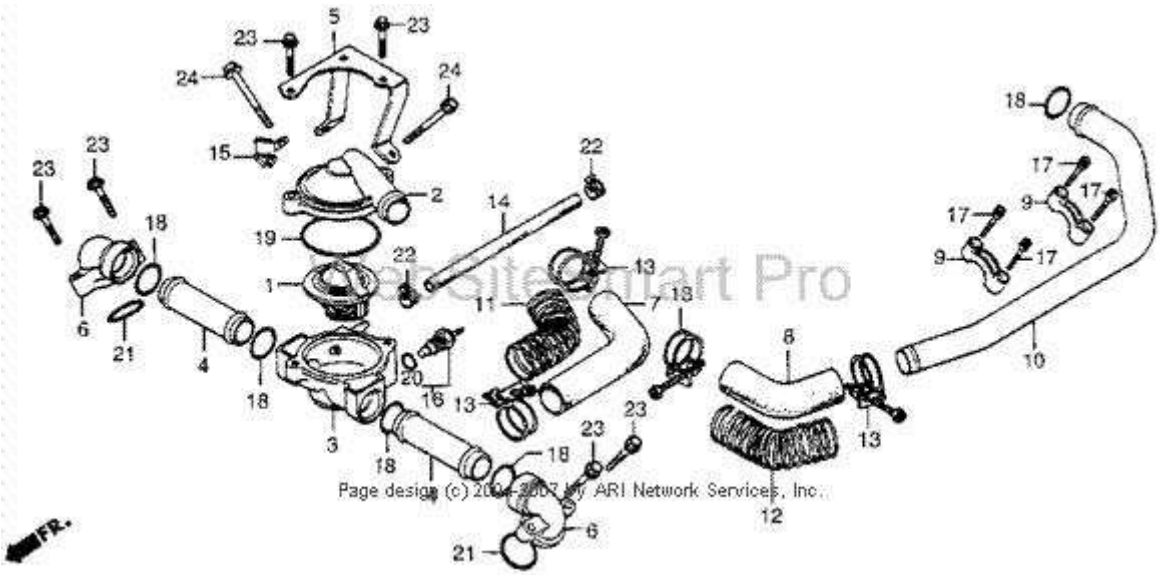

Tag	Description	Req	Price	
001	Thermostat Unit	1	$19.16	Add
002	Cover, Thermostat(Not Available)	1	$24.92	Add

003	Case, Thermostat	1	$38.50	Add
004	Pipe, Water (Upper)	2	$11.65	Add
005	Stay, Thermostat(Not Available)	1	$10.72	Add
006	Joint a, Water Pipe	2	$24.82	Add
007	Hose, Water (Upper)(Not Available)	1	$21.54	Add
008	Hose, Water (Lower)	1	$14.94	Add
009	Clamp, Water Pipe(Not Available)	2	$6.24	Add
010	Pipe, Rr. Water	1	$48.34	Add
013	Band, Hose(Not Available)	4	$4.07	Add
014	Tube (5x240)	1	$4.66	Add
016	Sending Unit, Water Temperature (Denso)	1	$31.10	Add
017	Bolt, Special (5x22)(Not Available)	4	$1.95	Add
018	O-Ring (21.9x2.3)	5	$1.95	Add
019	O-Ring (53.8x3.1)	1	$2.16	Add
020	O-Ring (13.5x1.4)	1	$1.95	Add
021	O-Ring (23x2.8)	2	$1.95	Add
022	Clip, Tube (10.5)	2	$1.95	Add
023	Bolt, Flange (6x25)	6	$1.95	Add
024	Bolt, Flange (6x50)	2	$1.95	Add

E03

BABBITT'S ONLINE

ALL BRANDS HONDA SUZUKI KAWASAKI SEA-DOO POLARIS ARCTIC CAT CAN-AM

BABBITT'S ONLINE.COM

» View Cart » Checkout » Email: Parts | Sales » (231) 737-4542 »

OEM Parts | Accessories | Apparel | Aftermarket Parts | Contact Us | About Us | Boo

» Babbitt's Online Home
» Buy OEM Parts Online
» Buy Accessories Online
» New Vehicles
» Preowned Vehicles
» Company Info
» Maps / Hours
» Specials
» Financing
» View Cart
» Checkout

Search:
[Find Accessory] GO
enter sku or name and click "GO"

» OEM PARTS

<<-- Pick New Model

Change Assembly: Cylinder Head Cover

ZOOM IN ZOOM OUT

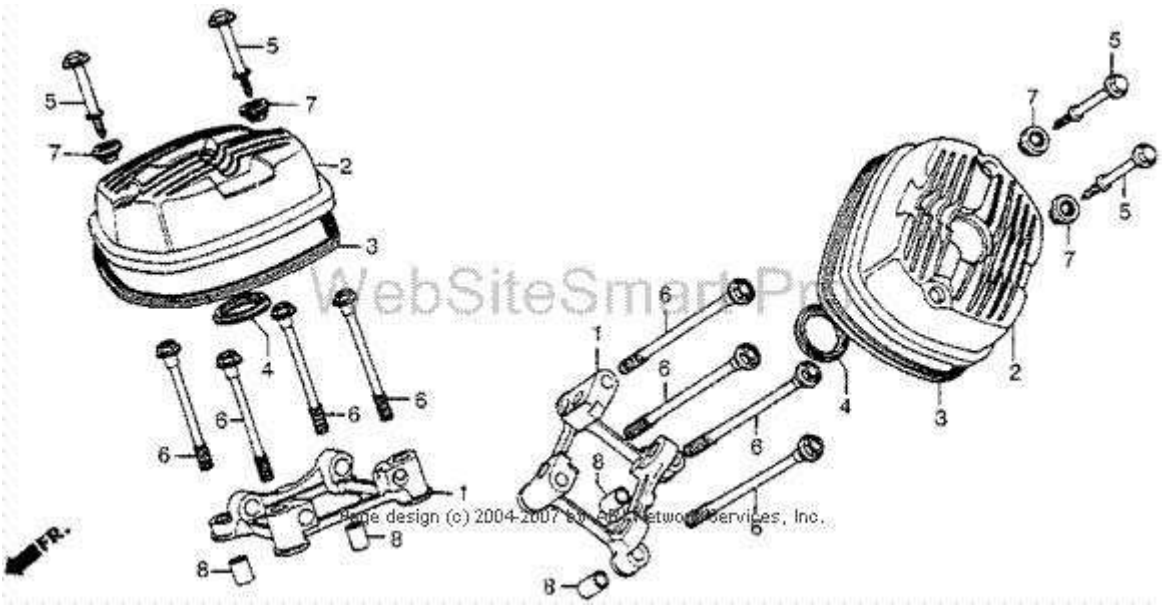

Tag	Description	Req	Price	
001	Holder, Valve Rocker Arm(Not Available)	2	$68.50	Add
002	Cover, Cylinder Head(Not Available)	2	$88.09	Add

003	Gasket, Head Cover	2	$7.84	Add
004	Gasket, Plug Hole	2	$2.98	Add
005	Bolt, Special (6x45.5)	4	$5.62	Add
006	Bolt, Flange (12x150)(Not Available)	8	$8.87	Add
007	Rubber, Setting	4	$2.62	Add
008	Pin a, Dowel (14x20)	4	$1.95	Add

Babbitts Sports Center
3712 Airline Rd.
Muskegon MI 49444
Phone: 231-737-4542

Terms And Conditions | Privacy Policy
Powered by ARI Network Services - WebsiteSmart Pro
(c)2003-2007

E04

BABBITT'S ONLINE

ALL BRANDS HONDA SUZUKI KAWASAKI SEA-DOO POLARIS ARCTIC CAT CAN-AM

BABBITT'S ONLINE.COM

» View Cart » Checkout » Email: Parts | Sales » (231) 737-4542 »

OEM Parts | Accessories | Apparel | Aftermarket Parts | Contact Us | About Us | Boo

» Babbitt's Online Home
» Buy OEM Parts Online
» Buy Accessories Online
» New Vehicles
» Preowned Vehicles
» Company Info
» Maps / Hours
» Specials
» Financing
» View Cart
» Checkout

Search:
[Find Accessory] GO
enter sku or name and click "GO"

» OEM PARTS

<<-- Pick New Model

Change Assembly: Right Cylinder Head

ZOOM IN ZOOM OUT

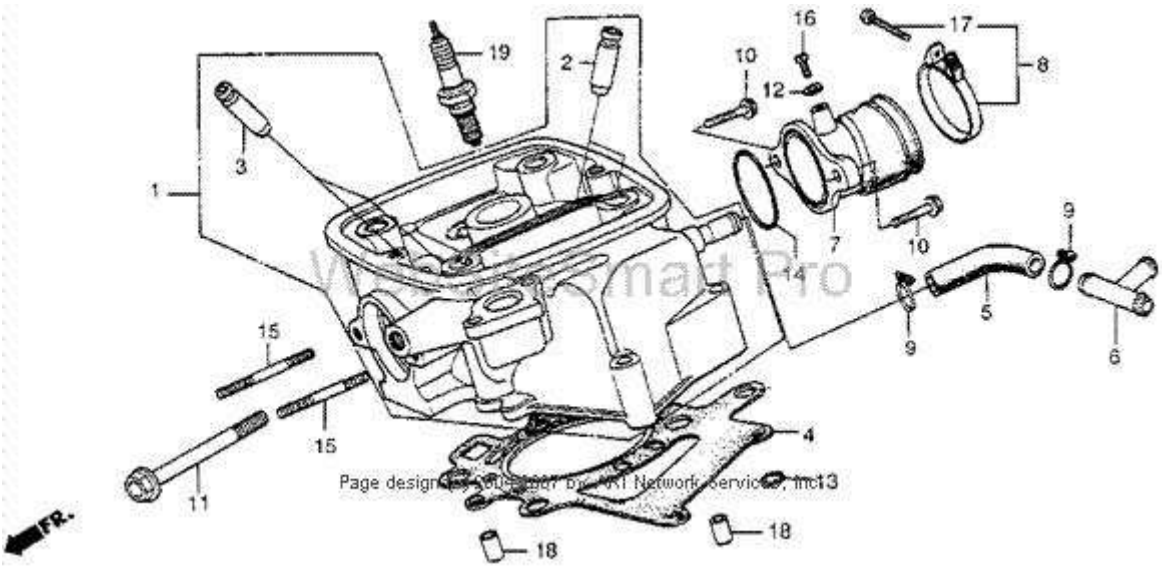

Tag	Description	Req	Price	
001	Cylinder Head, R	1	$285.92	Add
001	Cylinder Head, R	1	$302.20	Add

002	Guide, In Valve	2	$10.37	Add
004	Gasket, Cylinder Head (Nippon)	1	$22.14	Add
004	Gasket, Cylinder Head	1	$22.14	Add
004	Gasket, Cylinder Head	1	$22.14	Add
004	Gasket, Cylinder Head (Nippon Leakless)	1	$22.14	Add
004	Gasket, Cylinder Head (Nippon Leakless)	1	$22.14	Add
004	Gasket, Cylinder Head	1	$22.14	Add
005	Tube, R. Breather(Not Available)	1	$5.15	Add
006	Joint, Breather Three-Way	1	$9.26	Add
007	Insulator, R. Carburetor	1	$38.62	Add
007	Insulator, R. Carburetor	1	$38.62	Add
007	Insulator, R. Carburetor	1	$38.62	Add
008	Band, Air Cleaner Connecting Tube (56)	1	$4.42	Add
009	Clip, Sub-Tank Hose	2	$1.95	Add
010	Bolt, Flange (6x22)	2	$1.95	Add
011	Bolt, Flange (10x75)	1	$1.95	Add
012	Washer, Sealing (5mm)	1	$1.95	Add
013	O-Ring (8.8x1.9)	1	$1.95	Add
014	O-Ring (40x2.4)	1	$4.60	Add
015	Bolt, Stud (6x55)	2	$1.95	Add
016	Screw, Pan (5x8)	1	$1.95	Add
017	Screw, Pan (5x20)	1	$1.95	Add
018	Pin a, Dowel (8x14)	2	$1.95	Add
019	Spark Plug (D8ea) (Ngk)	1	$1.95	Add
019	Spark Plug (X24es-U) (Denso)	1	$1.95	Add

E05

BABBITT'S ONLINE

ALL BRANDS HONDA SUZUKI KAWASAKI SEA-DOO POLARIS ARCTIC CAT CAN-AM

BABBITT'S ONLINE.COM

» View Cart » Checkout » Email: Parts | Sales » (231) 737-4542 »

OEM Parts | Accessories | Apparel | Aftermarket Parts | Contact Us | About Us | Boo

» Babbitt's Online Home
» Buy OEM Parts Online
» Buy Accessories Online
» New Vehicles
» Preowned Vehicles
» Company Info
» Maps / Hours
» Specials
» Financing
» View Cart
» Checkout

Search:
[Find Accessory] GO
enter sku or name and click "GO"

» OEM PARTS

<<-- Pick New Model

Change Assembly: Left Cylinder Head

ZOOM IN ZOOM OUT

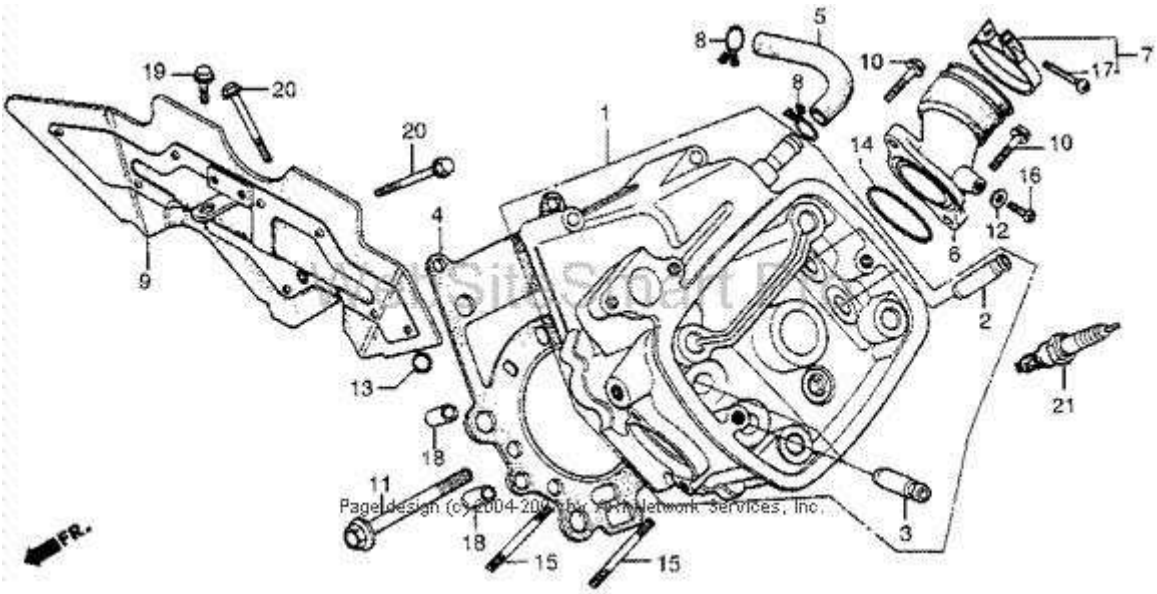

Tag	Description	Req	Price	
001	Cylinder Head, L.(Not Available)	1	$246.21	Add
002	Guide, In Valve	2	$10.37	Add

004	Gasket, Cylinder Head (Nippon)	1	$22.14	Add
004	Gasket, Cylinder Head	1	$22.14	Add
004	Gasket, Cylinder Head	1	$22.14	Add
004	Gasket, Cylinder Head (Nippon Leakless)	1	$22.14	Add
004	Gasket, Cylinder Head (Nippon Leakless)	1	$22.14	Add
004	Gasket, Cylinder Head	1	$22.14	Add
005	Tube, L. Breather	1	$7.62	Add
006	Insulator, L. Carburetor	1	$38.62	Add
006	Insulator, L. Carburetor	1	$38.62	Add
006	Insulator, L. Carburetor	1	$38.62	Add
007	Band, Air Cleaner Connecting Tube (56)	1	$4.42	Add
008	Clip, Sub-Tank Hose	2	$1.95	Add
009	Spoiler, Air	1	$70.30	Add
010	Bolt, Flange (6x22)	2	$1.95	Add
011	Bolt, Flange (10x75)	1	$1.95	Add
012	Washer, Sealing (5mm)	1	$1.95	Add
013	O-Ring (8.8x1.9)	1	$1.95	Add
014	O-Ring (40x2.4)	1	$4.60	Add
015	Bolt, Stud (6x55)	2	$1.95	Add
016	Screw, Pan (5x8)	1	$1.95	Add
017	Screw, Pan (5x20)	1	$1.95	Add
018	Pin a, Dowel (8x14)	2	$1.95	Add
019	Bolt, Flange (6x12)	1	$1.95	Add
019	Bolt, Flange (6x12)	1	$1.95	Add
020	Bolt, Flange (6x50)	2	$1.95	Add
021	Spark Plug (D8ea) (Ngk)	1	$1.95	Add
021	Spark Plug (X24es-U) (Denso)	1	$1.95	Add

E06

BABBITT'S ONLINE

ALL BRANDS HONDA SUZUKI KAWASAKI SEA-DOO POLARIS ARCTIC CAT CAN-AM

BABBITT'S ONLINE.COM

» View Cart » Checkout » Email: Parts | Sales » (231) 737-4542 »

OEM Parts | Accessories | Apparel | Aftermarket Parts | Contact Us | About Us | Boo

» Babbitt's Online Home
» Buy OEM Parts Online
» Buy Accessories Online
» New Vehicles
» Preowned Vehicles
» Company Info
» Maps / Hours
» Specials
» Financing
» View Cart
» Checkout

Search:
[Find Accessory] GO
enter sku or name and click "GO"

» OEM PARTS

<<-- Pick New Model

Change Assembly: Valve @ Upper Rocker Arm

ZOOM IN ZOOM OUT

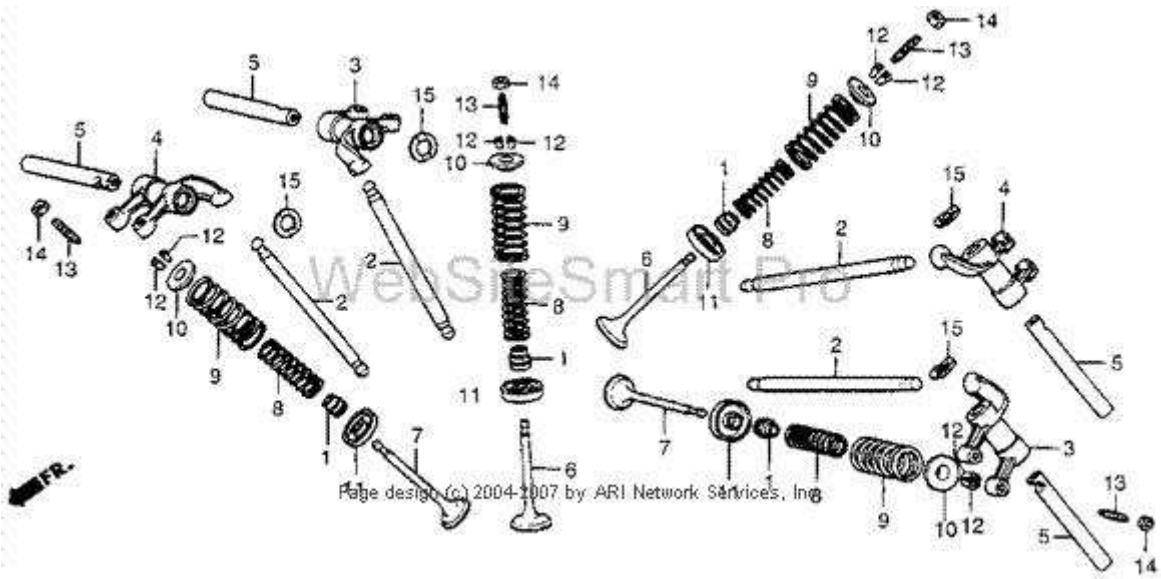

Tag	Description	Req	Price	
001	Seal, Valve Stem (Nok)	8	$4.74	Add
002	Rod, Push	4	$26.28	Add

004	Arm B, Rocker (Upper)	2	$94.74	Add
005	Shaft, Rocker Arm (Upper)	4	$21.53	Add
006	Valve, In	4	$26.91	Add
007	Valve, Ex	4	$45.63	Add
008	Spring, Valve (Inner)(Not Available)	8	$4.07	Add
009	Spring, Valve (Outer)(Not Available)	8	$5.48	Add
010	Retainer, Valve Spring	8	$2.84	Add
011	Seat, Valve Spring	8	$2.59	Add
012	Cotter, Valve	16	$2.67	Add
013	Screw, Tappet Adj	8	$3.74	Add
014	Nut, Tappet Adj	8	$1.95	Add
015	Washer, Wave (1.5mm)(Not Available)	4	$1.95	Add

Babbitts Sports Center
3712 Airline Rd.
Muskegon MI 49444
Phone: 231-737-4542

Terms And Conditions | Privacy Policy
Powered by ARI Network Services - WebsiteSmart Pro

E07

BABBITT'S ONLINE

ALL BRANDS HONDA SUZUKI KAWASAKI SEA-DOO POLARIS ARCTIC CAT CAN-AM

BABBITT'S ONLINE.COM

» View Cart » Checkout » Email: Parts | Sales » (231) 737-4542 »

OEM Parts | Accessories | Apparel | Aftermarket Parts | Contact Us | About Us | Boo

» Babbitt's Online Home
» Buy OEM Parts Online
» Buy Accessories Online
» New Vehicles
» Preowned Vehicles
» Company Info
» Maps / Hours
» Specials
» Financing
» View Cart
» Checkout

Search:
[Find Accessory] GO
enter sku or name and click "GO"

» OEM PARTS

<<-- Pick New Model

Change Assembly: Camshaft @ Lower Rocker Arm

ZOOM IN ZOOM OUT

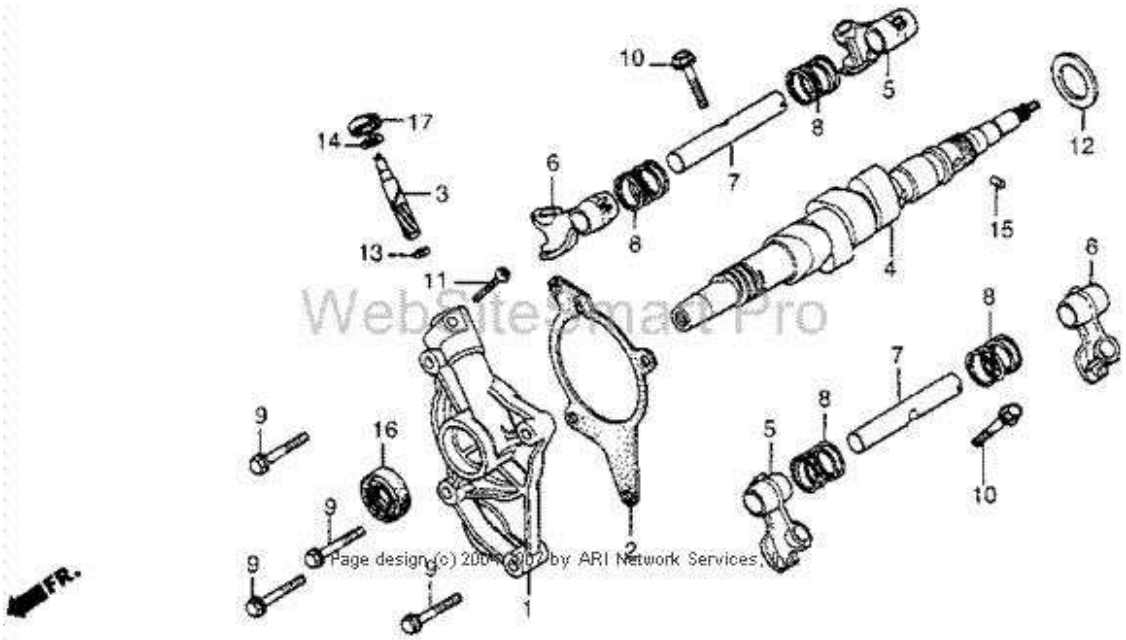

Page design (c) 2004-2007 by ARI Network Services, Inc.

Tag	Description	Req	Price	
001	Holder, Camshaft(Not Available)	1	$60.84	Add
002	Gasket, Camshaft Holder	1	$2.26	Add

002	Gasket, Camshaft Holder	1	$2.26	Add
002	Gasket, Camshaft Holder	1	$2.26	Add
003	Gear, Tachometer(Not Available)	1	$26.79	Add
004	Camshaft(Not Available)	1	$181.82	Add
005	Arm a, Rocker (Lower)	2	$67.90	Add
006	Arm B, Rocker (Lower)	2	$66.44	Add
006	Arm B, Rocker (Lower)(Not Available)	2	$66.44	Add
008	Spring a, Valve Rocker Arm(Not Available)	4	$1.95	Add
009	Bolt, Flange (6x28)	4	$1.95	Add
010	Bolt, Special (6x30)(Not Available)	2	$1.95	Add
011	Bolt, Special Flange (6x22)	1	$1.95	Add
013	Washer	1	$1.95	Add
014	Washer, Thrust (6.7mm)(Not Available)	1	$1.95	Add
015	Roller (5x8.5)(Not Available)	1	$1.95	Add
016	Oil Seal (17x28x7)	1	$3.26	Add
017	Oil Seal (6x14.5x5)	1	$2.05	Add

E08

BABBITT'S ONLINE

ALL BRANDS HONDA SUZUKI KAWASAKI SEA-DOO POLARIS ARCTIC CAT CAN-AM

BABBITT'S ONLINE.COM

» View Cart » Checkout » Email: Parts | Sales » (231) 737-4542 »

OEM Parts | Accessories | Apparel | Aftermarket Parts | Contact Us | About Us | Boo

» Babbitt's Online Home
» Buy OEM Parts Online
» Buy Accessories Online
» New Vehicles
» Preowned Vehicles
» Company Info
» Maps / Hours
» Specials
» Financing
» View Cart
» Checkout

Search:
[Find Accessory] GO
enter sku or name and click "GO"

» OEM PARTS

<<-- Pick New Model

Change Assembly: Clutch Cover @ Oil Filter

ZOOM IN ZOOM OUT

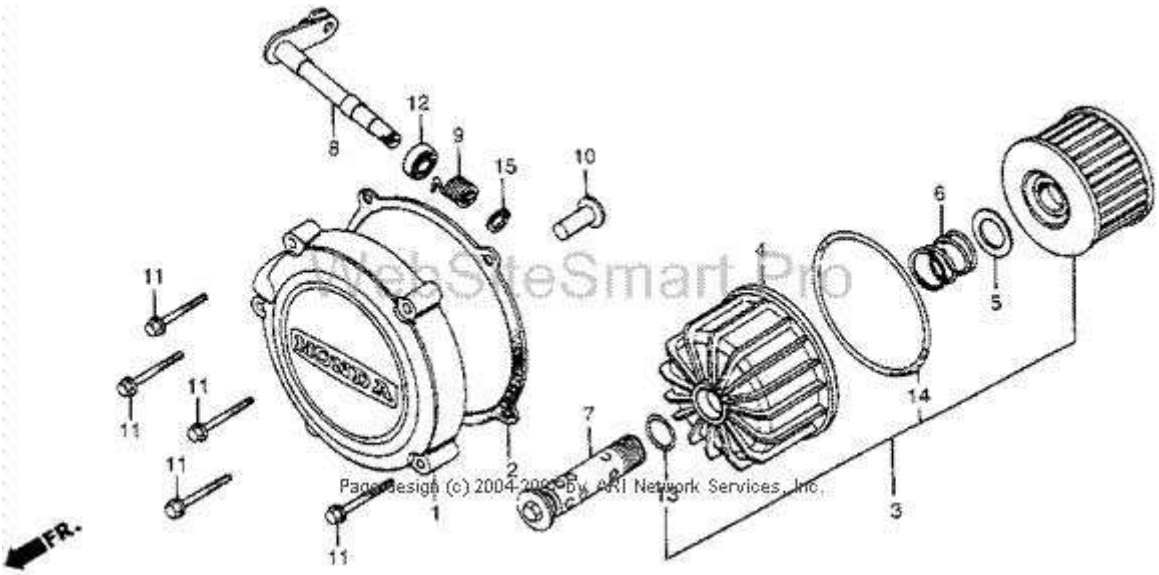

Tag	Description	Req	Price	
001	Cover, Clutch(Not Available)	1	$122.43	Add
002	Gasket, Clutch Cover	1	$5.88	Add

002	Gasket, Clutch Cover	1	$5.88	Add
002	Gasket, Clutch Cover	1	$5.88	Add
003	Element, Oil Filter	1	$6.38	Add
004	Case, Oil Filter(Not Available)	1	$48.98	Add
005	Seat, Oil Filter Spring	1	$2.17	Add
006	Spring, Filter Element Setting	1	$1.95	Add
007	Bolt, Oil Filter Center	1	$28.45	Add
007	Bolt, Oil Filter Center	1	$28.45	Add
008	Shaft, Clutch Lever(Not Available)	1	$26.84	Add
009	Spring, Clutch Lever	1	$1.95	Add
010	Rod, Clutch Lifter	1	$3.39	Add
011	Bolt, Flange (6x28)	5	$1.95	Add
012	Oil Seal (12x18x3) (Arai)	1	$1.99	Add
013	O-Ring (15x2.5)	1	$2.98	Add
014	O-Ring (81x4.5) (Arai)	1	$1.95	Add
015	Circlip (Outer) (10mm)	1	$1.95	Add

E09

BABBITT'S ONLINE

ALL BRANDS HONDA SUZUKI KAWASAKI SEA-DOO POLARIS ARCTIC CAT CAN-AM

BABBITT'S ONLINE.COM

» View Cart » Checkout » Email: Parts | Sales » (231) 737-4542 »

OEM Parts | Accessories | Apparel | Aftermarket Parts | Contact Us | About Us | Boo

» Babbitt's Online Home
» Buy OEM Parts Online
» Buy Accessories Online
» New Vehicles
» Preowned Vehicles
» Company Info
» Maps / Hours
» Specials
» Financing
» View Cart
» Checkout

Search:
[Find Accessory] GO
enter sku or name and click "GO"

» OEM PARTS

<<-- Pick New Model

Change Assembly: Transmission Cover

ZOOM IN ZOOM OUT

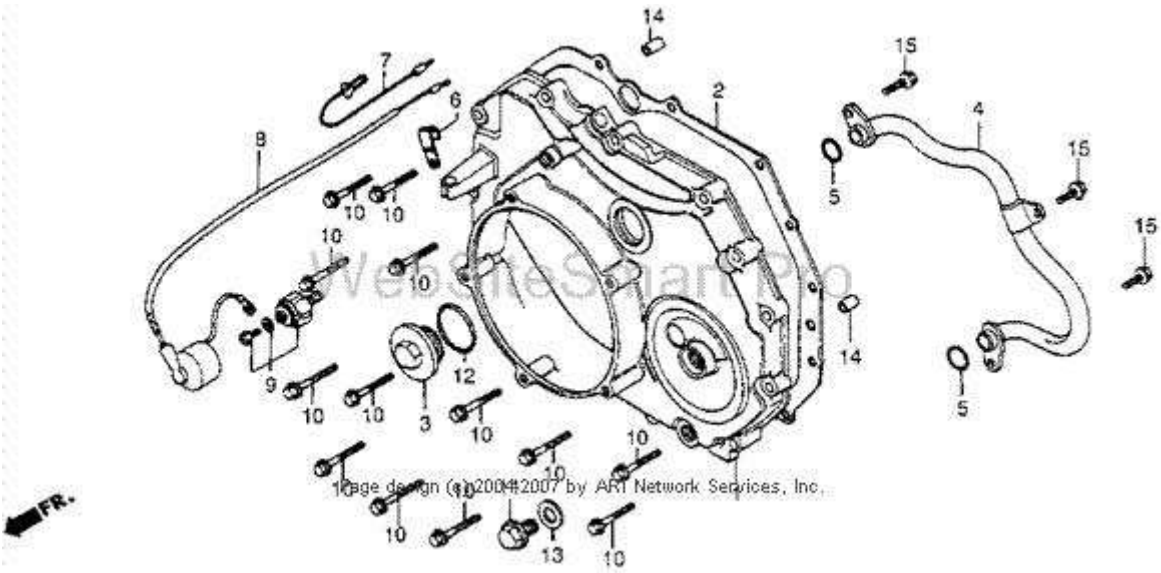

Page design (c)2004-2007 by ARI Network Services, Inc.

Tag	Description	Req	Price	
001	Cover, Transmission	1	$219.45	Add
002	Gasket, Transmission Cover	1	$10.82	Add

002	Gasket, Transmission Cover	1	$10.82	Add
002	Gasket, Transmission Cover	1	$10.82	Add
003	Cap, Valve Adj	1	$6.74	Add
004	Pipe, Oil Passage	1	$33.85	Add
005	O-Ring (11.8x2.4)	2	$1.95	Add
005	O-Ring (11.8x2.4)	2	$1.95	Add
006	Clamp, Cable	1	$2.05	Add
007	Sub-Wire a, Engine(Not Available)	1	$2.60	Add
008	Sub-Wire B, Engine(Not Available)	1	$10.12	Add
009	Switch Assy., Oil Pressure (Denso)	1	$19.46	Add
010	Bolt, Flange (6x28)	13	$1.95	Add
011	Bolt, Drain Plug (12mm)	1	$1.95	Add
012	O-Ring (27.5x2.6)	1	$1.95	Add
013	Washer, Drain Plug (12mm)	1	$1.95	Add
014	Pin a, Dowel (8x14)	2	$1.95	Add
015	Bolt, Flange (6x14)	3	$1.95	Add

E10

BABBITT'S ONLINE

ALL BRANDS HONDA SUZUKI KAWASAKI SEA-DOO POLARIS ARCTIC CAT CAN-AM

BABBITT'S ONLINE.COM

» View Cart » Checkout » Email: Parts | Sales » (231) 737-4542 »

OEM Parts | Accessories | Apparel | Aftermarket Parts | Contact Us | About Us | Boo

» Babbitt's Online Home
» Buy OEM Parts Online
» Buy Accessories Online
» New Vehicles
» Preowned Vehicles
» Company Info
» Maps / Hours
» Specials
» Financing
» View Cart
» Checkout

Search:
[Find Accessory] GO
enter sku or name and click "GO"

» OEM PARTS

<<-- Pick New Model

Change Assembly: Clutch

ZOOM IN ZOOM OUT

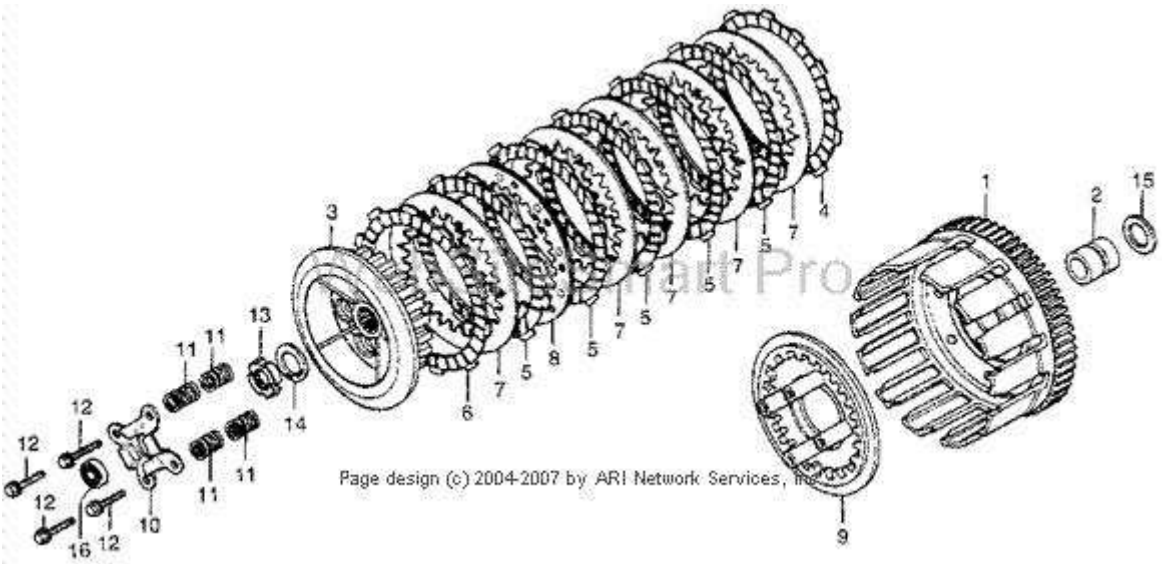

Tag	Description	Req	Price	
001	Clutch (Outer)(Not Available)	1	$194.33	Add
002	Guide, Clutch (Outer)(Not Available)	1	$14.02	Add

003	Center, Clutch	1	$45.85	Add
004	Disk, Clutch Friction	1	$9.63	Add
005	Disk, Clutch Friction	5	$9.79	Add
005	Disk, Clutch Friction	5	$9.79	Add
005	Disk, Clutch Friction	5	$9.79	Add
006	Disk B, Clutch Friction	1	$14.26	Add
006	Disk B, Clutch Friction	1	$14.26	Add
007	Plate B, Clutch	5	$8.19	Add
008	Plate B, Clutch(Not Available)	1	$35.56	Add
009	Plate, Clutch Pressure(Not Available)	1	$26.70	Add
010	Plate, Clutch Lifter(Not Available)	1	$11.36	Add
011	Spring, Clutch	4	$2.53	Add
012	Bolt, Special Flange (6x22)	4	$1.95	Add
013	Nut, Lock (20mm)(Not Available)	1	$1.95	Add
014	Washer, Lock	1	$2.66	Add
015	Washer, Thrust (25x42x2.3)	1	$2.86	Add
016	Bearing, Radial Ball (6000)	1	$4.62	Add

E11

» OEM PARTS

<<-- Pick New Model

Change Assembly: Oil Pump @ Primary Drive Gear

ZOOM IN ZOOM OUT

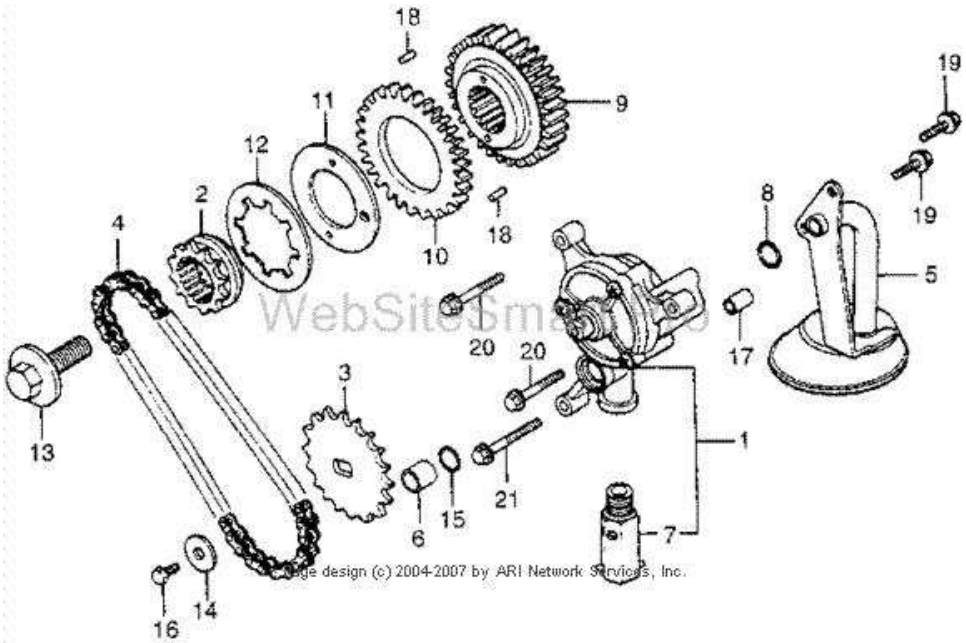

Tag	Description	Req	Price	
001	Pump Assy., Oil(Not Available)	1	$108.66	Add
002	Sprocket, Oil Pump Drive(Not Available)	1	$22.27	Add

003	Sprocket, Oil Pump Driven(Not Available)	1	$18.47	Add
004	Chain, Oil Pump	1	$30.42	Add
005	Body, Oil Strainer(Not Available)	1	$41.46	Add
006	Collar, O-Ring	1	$1.95	Add
007	Valve Assy., Relief	1	$23.62	Add
008	O-Ring (11.8x2.4)	1	$1.95	Add
008	O-Ring (11.8x2.4)	1	$1.95	Add
009	Gear, Primary Drive (33t)(Not Available)	1	$54.44	Add
010	Sub-Gear, Primary Drive (32t)	1	$28.36	Add
011	Plate, Side	1	$6.52	Add
012	Spring, Disk	1	$6.34	Add
013	Bolt, Ubs (12x28)	1	$5.73	Add
014	Washer, Spark Advancer Setting	1	$1.95	Add
015	O-Ring (13.6x2.4)	1	$1.95	Add
016	Bolt, Hex. (6x8)	1	$1.95	Add
016	Bolt, Hex. (6x8)	1	$1.95	Add
017	Pin a, Dowel (8x14)	1	$1.95	Add
018	Pin, Dowel (3x5)(Source: Vintage Parts Inc.)	2	$1.95	Add
019	Bolt, Flange (6x14)	2	$1.95	Add
020	Bolt, Flange (6x25)	2	$1.95	Add
021	Bolt, Flange (6x32)	1	$1.95	Add

E12

BABBITT'S ONLINE

ALL BRANDS HONDA SUZUKI KAWASAKI SEA-DOO POLARIS ARCTIC CAT CAN-AM

BABBITT'S ONLINE.COM

» View Cart » Checkout » Email: Parts | Sales » (231) 737-4542 »

OEM Parts | Accessories | Apparel | Aftermarket Parts | Contact Us | About Us | Boo

» Babbitt's Online Home
» Buy OEM Parts Online
» Buy Accessories Online
» New Vehicles
» Preowned Vehicles
» Company Info
» Maps / Hours
» Specials
» Financing
» View Cart
» Checkout

Search:
[Find Accessory] GO
enter sku or name and click "GO"

» OEM PARTS

<<-- Pick New Model

Change Assembly: Water Pump @ C.D.I. Pulser

ZOOM IN ZOOM OUT

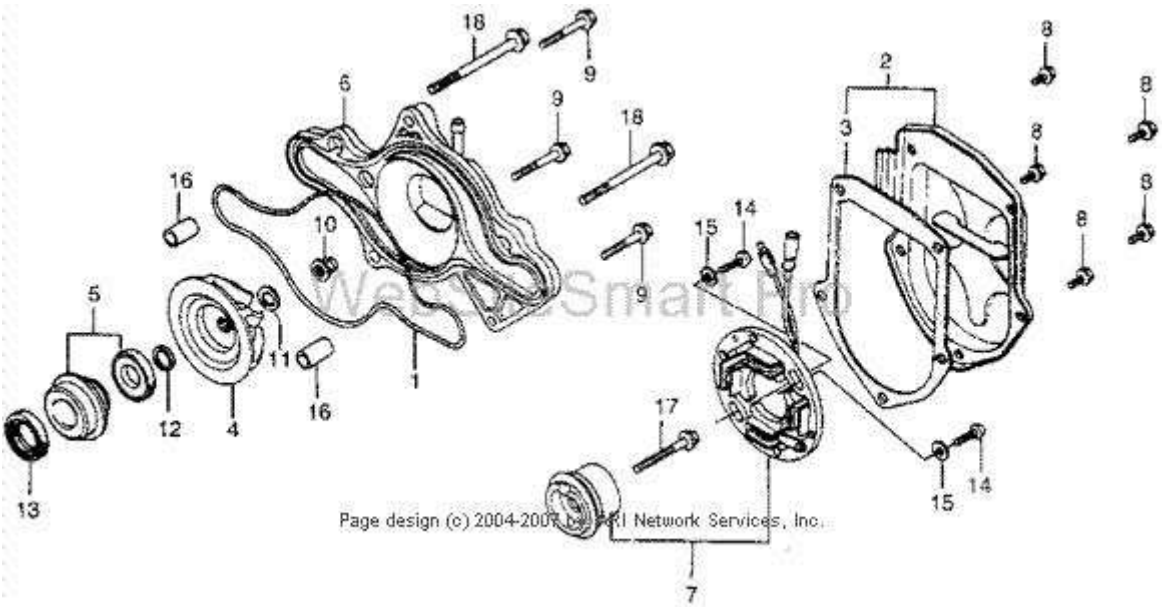

Tag	Description	Req	Price	
001	Gasket, Water Pump Base	1	$3.24	Add
002	Cover, Pulser(Not Available)	1	$23.01	Add

003	Gasket, Pulser Cover	1	$4.58	Add
003	Gasket, Pulser Cover	1	$4.58	Add
003	Gasket, Pulser Cover	1	$4.58	Add
004	Impeller, Water Pump	1	$38.12	Add
005	Seal, Mechanical	1	$52.19	Add
006	Cover, Water Pump(Not Available)	1	$86.66	Add
007	Pulser Assy., C.D.I. (Hitachi)(Not Available)	1	$78.66	Add
008	Bolt, Flange (6x14)	5	$1.95	Add
009	Bolt, Flange (6x25)	3	$1.95	Add
009	Bolt, Flange (6x25)	3	$1.95	Add
010	Nut, Cap (6mm)	1	$1.95	Add
011	Washer, Sealing (6mm)	1	$1.95	Add
012	Washer, Thrust (10mm)	1	$1.95	Add
013	Oil Seal (18x28x6)	1	$6.20	Add
014	Screw, Pan (5x16)	2	$1.95	Add
015	Washer, Plain (5mm)	2	$1.95	Add
016	Pin a, Dowel (10x16)	2	$1.95	Add
017	Bolt, Flange (6x32)	1	$1.95	Add
018	Bolt, Flange (8x65)	2	$1.95	Add

E13

BABBITT'S ONLINE

ALL BRANDS HONDA SUZUKI KAWASAKI SEA-DOO POLARIS ARCTIC CAT CAN-AM

BABBITT'S ONLINE.COM

» View Cart » Checkout » Email: Parts | Sales » (231) 737-4542 »

OEM Parts | Accessories | Apparel | Aftermarket Parts | Contact Us | About Us | Boo

» Babbitt's Online Home
» Buy OEM Parts Online
» Buy Accessories Online
» New Vehicles
» Preowned Vehicles
» Company Info
» Maps / Hours
» Specials
» Financing
» View Cart
» Checkout

Search:
[Find Accessory] GO
enter sku or name and click "GO"

» OEM PARTS

<<-- Pick New Model

Change Assembly: Starter Motor

ZOOM IN ZOOM OUT

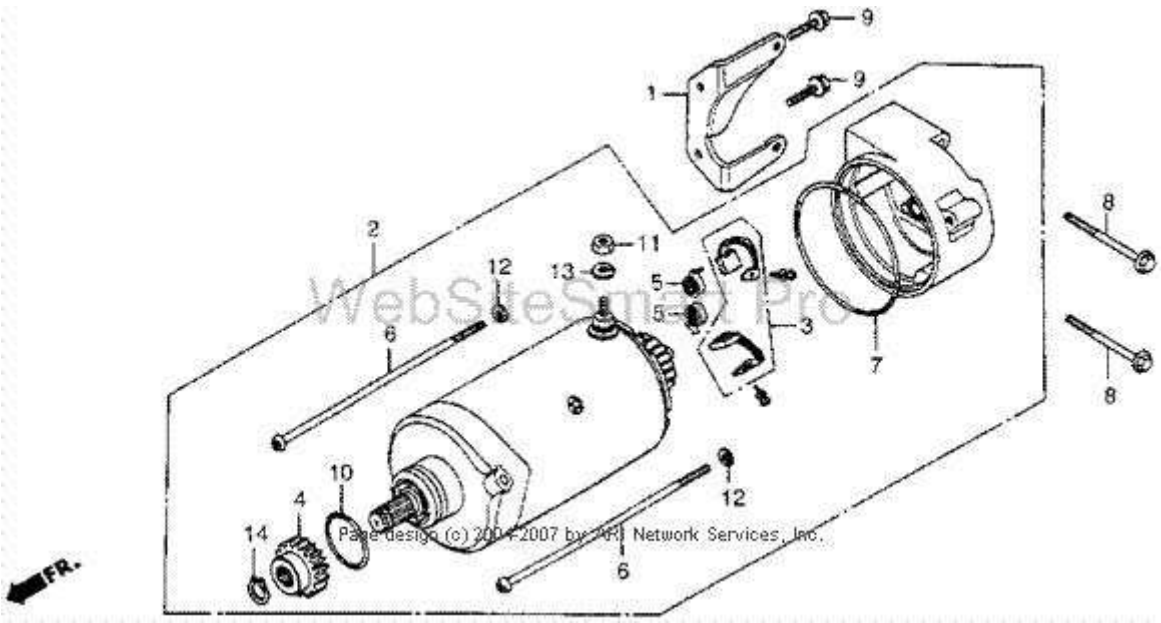

Tag	Description	Req	Price	
001	Stay, Starter Motor(Not Available)	1	$10.72	Add
002	Motor Assy., Starter (Mitsuba)(Not Available)	1	$312.71	Add

003	Brush Set, Carbon	1	$12.71	Add
004	Gear, Starter Motor (27t)(Not Available)	1	$19.77	Add
005	Spring, Carbon Brush	2	$1.95	Add
006	Bolt, Starter Motor Cover	2	$1.95	Add
007	O-Ring (60x1.4)	1	$3.56	Add
008	Bolt, Flange (6x35)	2	$1.95	Add
009	Bolt, Flange (6x18)	2	$1.95	Add
010	O-Ring (24.4x3.1)	1	$3.86	Add
011	Nut, Hex. (6mm)	1	$1.95	Add
012	Washer, Spring (5mm)	2	$1.95	Add
013	Washer, Spring (6mm)	1	$1.95	Add
014	Circlip (Outer) (11mm)	1	$1.95	Add

Babbitts Sports Center
3712 Airline Rd.
Muskegon MI 49444
Phone: 231-737-4542

Terms And Conditions | Privacy Policy
Powered by ARI Network Services - WebsiteSmart Pro

E14

BABBITT'S ONLINE

ALL BRANDS HONDA SUZUKI KAWASAKI SEA-DOO POLARIS ARCTIC CAT CAN-AM

BABBITT'S ONLINE.COM

» View Cart » Checkout » Email: Parts | Sales » (231) 737-4542 »

OEM Parts | Accessories | Apparel | Aftermarket Parts | Contact Us | About Us | Boo

» Babbitt's Online Home
» Buy OEM Parts Online
» Buy Accessories Online
» New Vehicles
» Preowned Vehicles
» Company Info
» Maps / Hours
» Specials
» Financing
» View Cart
» Checkout

Search:
[Find Accessory] GO
enter sku or name and click "GO"

» OEM PARTS

<<-- Pick New Model

Change Assembly: Rear Cover

ZOOM IN ZOOM OUT

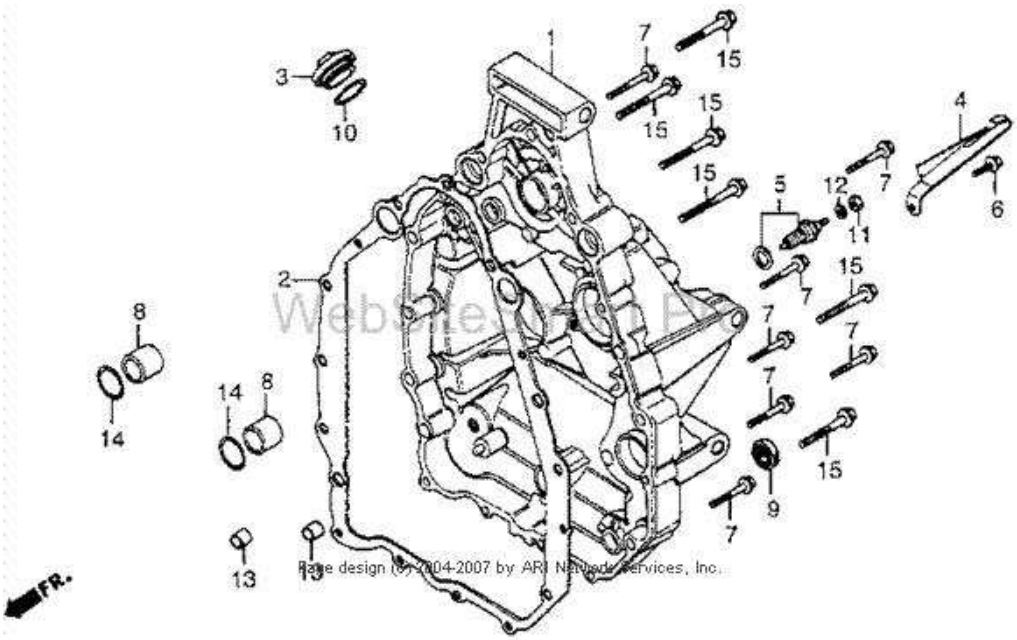

Tag	Description	Req	Price	
001	Cover, Rr.(Not Available)	1	$306.12	Add
002	Gasket, Rr. Cover	1	$17.54	Add

002	Gasket, Rr. Cover	1	$17.54	Add
002	Gasket, Rr. Cover	1	$17.54	Add
002	Gasket, Rr. Cover	1	$17.54	Add
002	Gasket, Rr. Cover	1	$17.54	Add
003	Cap, Valve Adj	1	$6.74	Add
004	Guide, Neutral Cable	1	$4.02	Add
005	Switch Assy., Neutral (Toyo)	1	$10.12	Add
006	Bolt, Flange (6x14)	1	$1.95	Add
007	Bolt, Flange (6x32)	7	$1.95	Add
008	Collar (22.2mm)(Not Available)	2	$3.20	Add
009	Oil Seal (14x26x6)	1	$2.74	Add
010	O-Ring (27.5x2.6)	1	$1.95	Add
011	Nut, Hex. (4mm)	1	$1.95	Add
012	Washer, Spring (4mm)	1	$1.95	Add
013	Pin a, Dowel (10x16)	2	$1.95	Add
014	O-Ring (23x2.8)	2	$1.95	Add
015	Bolt, Flange (8x40)	6	$1.95	Add
015	Bolt, Flange (8x40)	6	$1.95	Add

E15

BABBITT'S ONLINE

ALL BRANDS HONDA SUZUKI KAWASAKI SEA-DOO POLARIS ARCTIC CAT CAN-AM

BABBITT'S ONLINE.COM

» View Cart » Checkout » Email: Parts | Sales » (231) 737-4542 »

OEM Parts | Accessories | Apparel | Aftermarket Parts | Contact Us | About Us | Boo

» Babbitt's Online Home
» Buy OEM Parts Online
» Buy Accessories Online
» New Vehicles
» Preowned Vehicles
» Company Info
» Maps / Hours
» Specials
» Financing
» View Cart
» Checkout

Search:
[Find Accessory] GO
enter sku or name and click "GO"

» OEM PARTS

<<-- Pick New Model

Change Assembly: Alternator

ZOOM IN ZOOM OUT

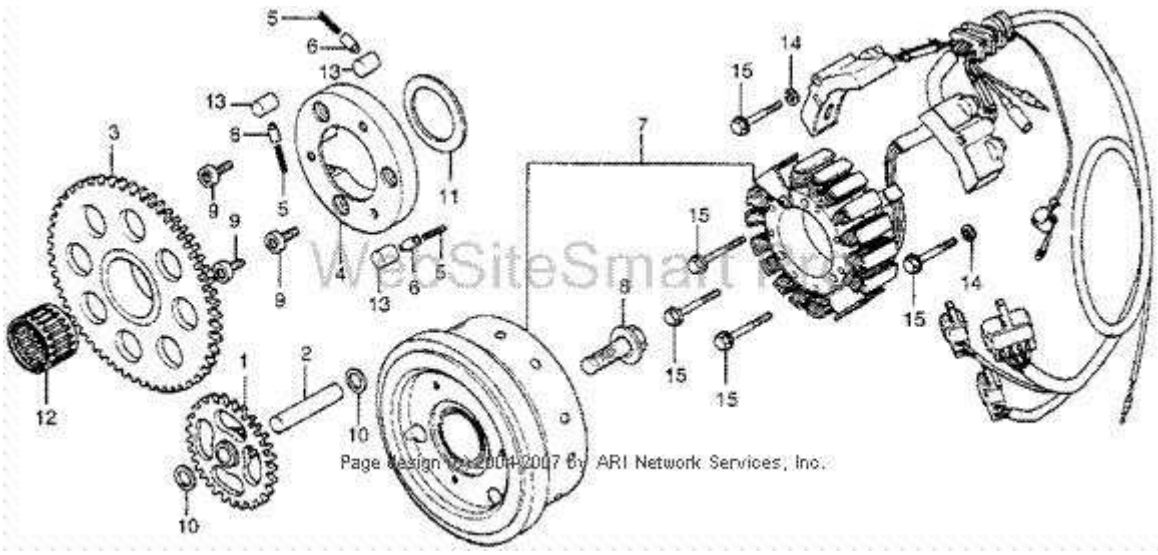

Tag	Description	Req	Price	
001	Gear, Starter Reduction (78t 11t)(Not Available)	1	$21.67	Add
002	Shaft, Starter Reduction Gear(Not Available)	1	$11.29	Add

003	Gear, Starting Driven	1	$97.00	Add
004	Clutch, Starter (Outer)	1	$106.51	Add
005	Spring, Starter Clutch Roller	3	$1.95	Add
006	Cap, Starter Clutch Roller Spring	3	$9.40	Add
007	Alternator Assy.(Not Available)	1	$386.90	Add
008	Bolt, Alternator Setting (12x30)(Not Available)	1	$6.84	Add
009	Bolt,Socket 8mm	3	$2.49	Add
010	Washer (12mm)(Not Available)	2	$1.95	Add
011	Washer, Thrust (37mm)(Not Available)	1	$2.74	Add
012	Bearing, Needle (32mm) (Tomuson)	1	$14.84	Add
013	Roller (15x13)	3	$3.18	Add
014	Washer, Spring (6mm)	2	$1.95	Add
015	Bolt, Flange (6x40)	5	$1.95	Add
016	Stator(Not Available)	1	$260.22	Add

Babbitts Sports Center
3712 Airline Rd.
Muskegon MI 49444
Phone: 231-737-4542

E16

» OEM PARTS

<<-- Pick New Model

Change Assembly: Cam Chain @ Tensioner

ZOOM IN ZOOM OUT

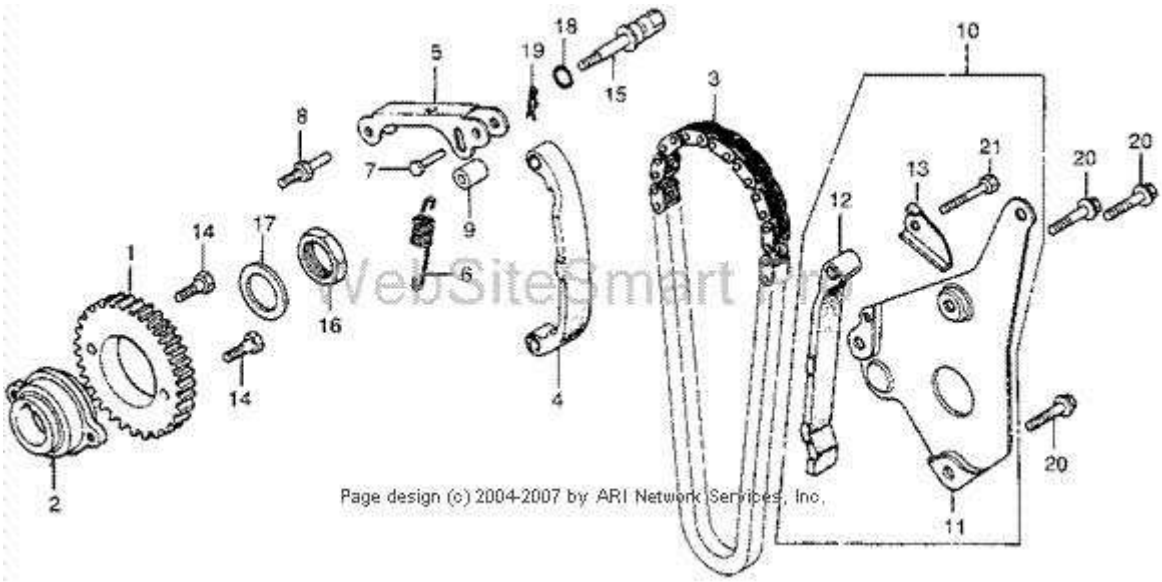

Tag	Description	Req	Price	
001	Sprocket, Cam	1	$46.21	Add
002	Boss, Cam Sprocket(Not Available)	1	$26.56	Add

003	Chain, Cam (Tsubakimoto)	1	$80.62	Add
003	Chain, Cam	1	$80.62	Add
003	Chain, Cam	1	$80.62	Add
004	Tensioner, Cam Chain	1	$43.91	Add
004	Tensioner, Cam Chain	1	$43.91	Add
005	Arm, Tensioner Setting	1	$9.54	Add
006	Spring, Tensioner(Not Available)	1	$6.31	Add
007	Pin, Cam Chain Tensioner(Not Available)	1	$2.56	Add
008	Pin, Tensioner Setting	1	$3.18	Add
009	Collar (7x13.2)(Not Available)	1	$1.95	Add
010	Guide Set, Cam Chain	1	$35.98	Add
011	Plate a, Cam Chain Guide Setting(Not Available)	1	$13.22	Add
012	Guide, Cam Chain	1	$35.98	Add
014	Bolt, Hex. Knock (7x17)(Not Available)	2	$1.95	Add
015	Bolt, Tensioner Lock	1	$7.77	Add
016	Nut, Lock (20mm)	1	$5.90	Add
017	Washer, Lock	1	$2.66	Add
018	O-Ring (6.5x3.1)	1	$1.95	Add
019	Pin, Lock (6mm)	1	$1.95	Add
020	Bolt, Flange (6x16)	3	$1.95	Add

E17

BABBITT'S ONLINE

ALL BRANDS HONDA SUZUKI KAWASAKI SEA-DOO POLARIS ARCTIC CAT CAN-AM

BABBITT'S ONLINE.COM

» View Cart » Checkout » Email: Parts | Sales » (231) 737-4542 »

OEM Parts | Accessories | Apparel | Aftermarket Parts | Contact Us | About Us | Boo

» Babbitt's Online Home
» Buy OEM Parts Online
» Buy Accessories Online
» New Vehicles
» Preowned Vehicles
» Company Info
» Maps / Hours
» Specials
» Financing
» View Cart
» Checkout

Search:
[Find Accessory] GO
enter sku or name and click "GO"

» OEM PARTS

<<-- Pick New Model

Change Assembly: Final Shaft

ZOOM IN ZOOM OUT

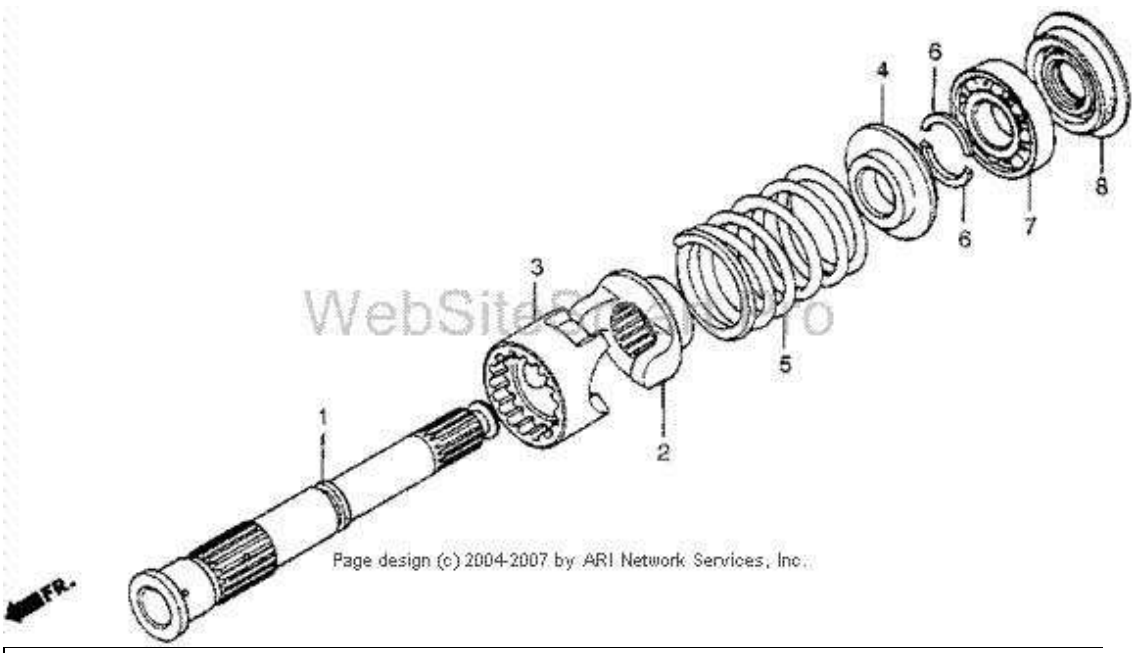

Tag	Description	Req	Price	
001	Shaft, Final(Not Available)	1	$77.90	Add
002	Lifter, Damper(Not Available)	1	$48.10	Add

003	Cam, Damper(Not Available)	1	$59.34	Add
004	Stopper, Damper Spring(Not Available)	1	$15.33	Add
005	Spring, Damper(Not Available)	1	$22.74	Add
006	Washer, Spring Stopper	2	$6.95	Add
007	Bearing, Ball (62/22) (Nachi)	1	$14.36	Add
008	Oil Seal (22x36x7)	1	$7.07	Add

Babbitts Sports Center
3712 Airline Rd.
Muskegon MI 49444
Phone: 231-737-4542

Terms And Conditions | Privacy Policy
Powered by ARI Network Services - WebsiteSmart Pro
(c)2003-2007

E18

BABBITT'S ONLINE

ALL BRANDS HONDA SUZUKI KAWASAKI SEA-DOO POLARIS ARCTIC CAT CAN-AM

BABBITT'S ONLINE.COM

» View Cart » Checkout » Email: Parts | Sales » (231) 737-4542 »

OEM Parts | Accessories | Apparel | Aftermarket Parts | Contact Us | About Us | Boo

» Babbitt's Online Home
» Buy OEM Parts Online
» Buy Accessories Online
» New Vehicles
» Preowned Vehicles
» Company Info
» Maps / Hours
» Specials
» Financing
» View Cart
» Checkout

Search:
[Find Accessory] GO
enter sku or name and click "GO"

» OEM PARTS

<<-- Pick New Model

Change Assembly: Cylinder Block

ZOOM IN ZOOM OUT

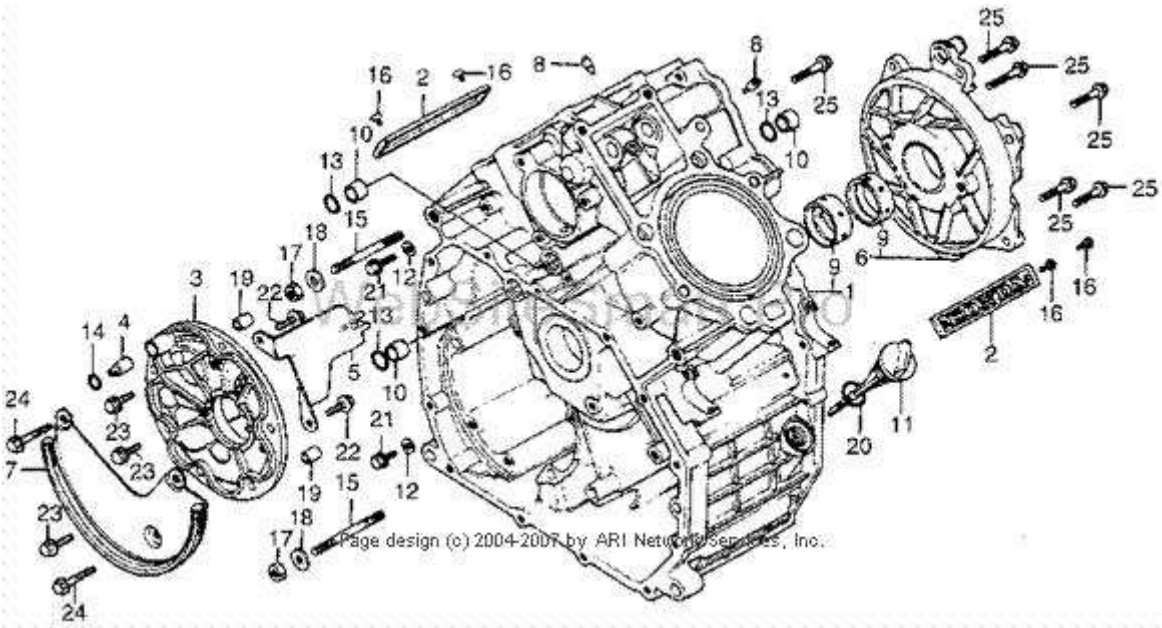

Tag	Description	Req	Price	
001	Block, Cylinder(Not Available)	1	$965.47	Add
002	Emblem, Cylinder Block(Not Available)	2	$14.92	Add

003	Holder, Transmission(Not Available)	1	$105.14	Add
004	Orifice (8mm)(Not Available)	1	$3.88	Add
005	Plate, Transmission Holder(Not Available)	1	$11.48	Add
006	Cap, Crankshaft(Not Available)	1	$143.97	Add
008	Valve, Oil Control Orifice	2	$5.58	Add
009	Bearing a, Main (Blue)(Not Available)	2	$16.52	Add
009	Bearing B, Main (Black)	2	$18.47	Add
009	Bearing C, Main (Brown)	2	$18.47	Add
010	Collar, O-Ring	3	$1.95	Add
011	Dipstick, Oil	1	$6.60	Add
012	Washer, Sealing (6.5x12)	2	$2.94	Add
013	O-Ring (13.6x2.4)	3	$1.95	Add
014	O-Ring (8x1.7) (Arai)	1	$1.95	Add
015	Bolt, Stud (10x90)	2	$1.95	Add
016	Screw, Tapping (4x8)(Not Available)	4	$1.95	Add
017	Nut, Hex. (10mm)	2	$1.95	Add
018	Washer, Plain (10mm)	2	$1.95	Add
019	Pin a, Dowel (8x14)	2	$1.95	Add
020	O-Ring (22x3.0)	1	$1.95	Add
020	O-Ring (23x2.8)	1	$1.95	Add
021	Bolt, Flange (6x12)	2	$1.95	Add
021	Bolt, Flange (6x12)	2	$1.95	Add
022	Bolt, Flange (6x16)	2	$1.95	Add
023	Bolt, Flange (6x20)	4	$1.95	Add
024	Bolt, Flange (6x32)	2	$1.95	Add
025	Bolt, Flange (8x25)	7	$1.95	Add

E19

BABBITT'S ONLINE

ALL BRANDS HONDA SUZUKI KAWASAKI SEA-DOO POLARIS ARCTIC CAT CAN-AM

BABBITT'S ONLINE.COM

» View Cart » Checkout » Email: Parts | Sales » (231) 737-4542 »

OEM Parts | Accessories | Apparel | Aftermarket Parts | Contact Us | About Us | Boo

» Babbitt's Online Home
» Buy OEM Parts Online
» Buy Accessories Online
» New Vehicles
» Preowned Vehicles
» Company Info
» Maps / Hours
» Specials
» Financing
» View Cart
» Checkout

Search:
[Find Accessory] GO
enter sku or name and click "GO"

» OEM PARTS

<<-- Pick New Model

Change Assembly: Crankshaft @ Piston

ZOOM IN ZOOM OUT

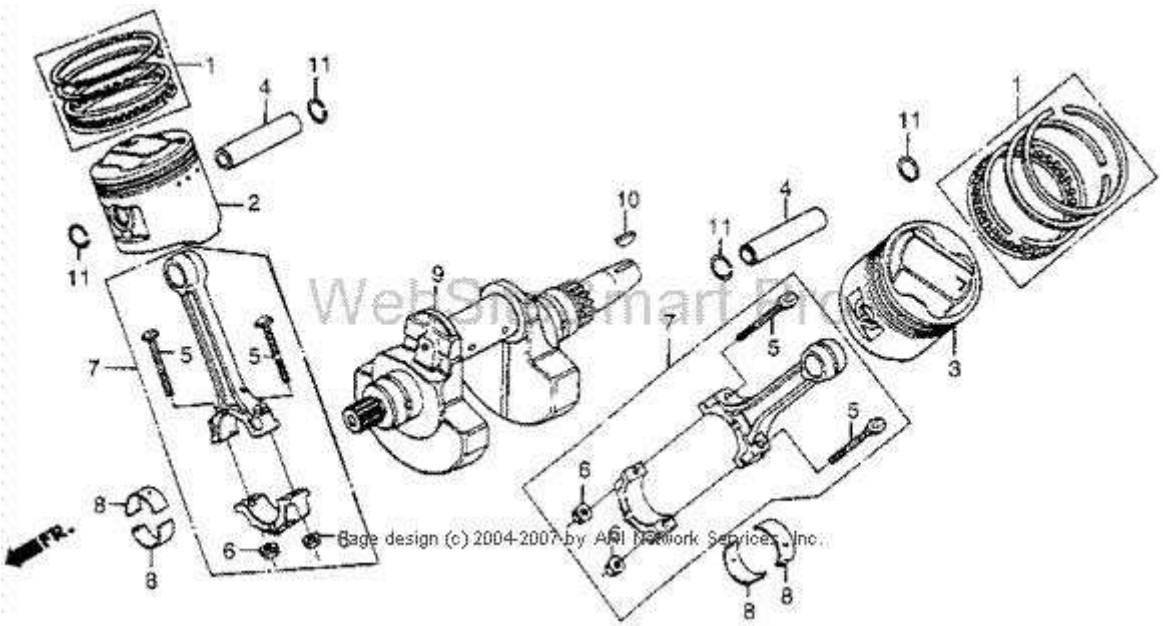

Tag	Description	Req	Price	
001	Ring Set, Piston (Std) (Nippon)	2	$33.76	Add
001	Ring Set, Piston (Os 0.25) (Nippon)(Not Available)	2	$30.18	Add

001	Ring Set, Piston (Os 0.50) (Nippon)(Not Available)	2	$30.18	Add
002	Piston, R. (Std)(Not Available)	1	$50.60	Add
002	Piston, R. (Os 0.25)	1	$53.00	Add
002	Piston, R. (Os 0.50)(Not Available)	1	$48.42	Add
003	Piston, L. (Std)	1	$53.00	Add
003	Piston, L. (Os 0.25)	1	$53.00	Add
003	Piston, L. (Os 0.50)	1	$51.87	Add
004	Pin, Piston	2	$13.21	Add
005	Bolt, Connecting Rod(Not Available)	4	$3.52	Add
006	Nut, Connecting Rod	4	$2.26	Add
007	Rod Assy., Connecting	2	$113.47	Add
008	Bearing B, Connecting Rod (Black)	4	$10.22	Add
008	Bearing C, Connecting Rod (Brown)	4	$10.22	Add
008	Bearing D, Connecting Rod (Green)	4	$9.19	Add
008	Bearing E, Connecting Rod (Yellow)(Not Available)	4	$7.91	Add
008	Bearing F, Connecting Rod (Pink)(Not Available)	4	$7.91	Add
008	Bearing F, Connecting Rod (Pink)	4	$7.91	Add
009	Crankshaft(Not Available)	1	$363.84	Add
010	Key, Special Woodruff (25x18)	1	$1.95	Add
011	Clip, Piston Pin (21mm)	4	$1.95	Add

E20

BABBITT'S ONLINE

ALL BRANDS HONDA SUZUKI KAWASAKI SEA-DOO POLARIS ARCTIC CAT CAN-AM

BABBITT'S ONLINE.COM

» View Cart » Checkout » Email: Parts | Sales » (231) 737-4542 »

OEM Parts | Accessories | Apparel | Aftermarket Parts | Contact Us | About Us | Boo

» Babbitt's Online Home
» Buy OEM Parts Online
» Buy Accessories Online
» New Vehicles
» Preowned Vehicles
» Company Info
» Maps / Hours
» Specials
» Financing
» View Cart
» Checkout

Search:
[Find Accessory] GO
enter sku or name and click "GO"

» OEM PARTS

<<-- Pick New Model

Change Assembly: Transmission

ZOOM IN ZOOM OUT

Tag	Description	Req	Price	
001	Mainshaft, Transmission (15t)(Not Available)	1	$65.64	Add
002	Plate, Oil Guide(Not Available)	1	$2.06	Add

003	Countershaft(Not Available)	1	$80.16	Add
004	Gear, Countershaft First (41t)(Not Available)	1	$63.13	Add
005	Bush (20mm)(Not Available)	1	$13.99	Add
006	Gear, Mainshaft Second (20t)	1	$27.97	Add
007	Gear, Countershaft Second (37t)(Not Available)	1	$58.88	Add
008	Gear, Mainshaft Third (24t)	1	$57.32	Add
009	Gear, Countershaft Third (34t)(Not Available)	1	$56.41	Add
010	Gear, Mainshaft Fourth (27t)(Not Available)	1	$62.05	Add
011	Gear, Countershaft Fourth (31t)	1	$97.00	Add
012	Gear, Mainshaft Fifth (29t)	1	$68.50	Add
013	Gear, Countershaft Fifth (27t)	1	$82.22	Add
014	Collar, Countershaft(Not Available)	1	$29.06	Add
015	Washer, Thrust (25mm)	4	$1.95	Add
016	Washer, Thrust (20mm)	2	$1.95	Add
017	Washer, Thrust (25mm)(Not Available)	1	$3.52	Add
018	Circlip (Outer) (25mm)	3	$1.95	Add
019	Bearing, Needle (20mm)	1	$23.90	Add
020	Bearing, Radial Ball (6205)	1	$10.26	Add
020	Bearing, Radial Ball (6205)	1	$10.18	Add
021	Bearing, Radial Ball (6305)(Not Available)	1	$9.58	Add
022	Bearing, Radial Ball (6204u)	1	$10.94	Add

E21

BABBITT'S ONLINE

ALL BRANDS HONDA SUZUKI KAWASAKI SEA-DOO POLARIS ARCTIC CAT CAN-AM

BABBITT'S ONLINE.COM

» View Cart » Checkout » Email: Parts | Sales » (231) 737-4542 »

OEM Parts | Accessories | Apparel | Aftermarket Parts | Contact Us | About Us | Boo

» Babbitt's Online Home
» Buy OEM Parts Online
» Buy Accessories Online
» New Vehicles
» Preowned Vehicles
» Company Info
» Maps / Hours
» Specials
» Financing
» View Cart
» Checkout

Search:
[Find Accessory] GO
enter sku or name and click "GO"

» OEM PARTS

<<-- Pick New Model

Change Assembly: Shift Drum @ Shift Fork

ZOOM IN ZOOM OUT

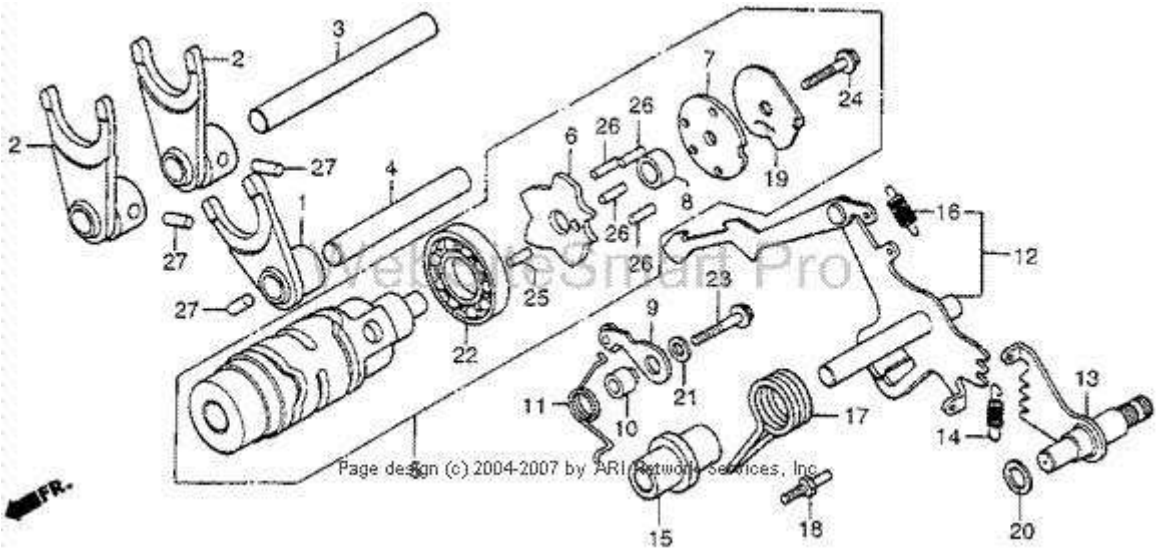

Tag	Description	Req	Price	
001	Fork, Mainshaft Third Gearshift	1	$40.67	Add
002	Fork, Countershaft Fifth Gearshift	2	$58.22	Add

003	Shaft, Gearshift Fork Guide(Not Available)	1	$10.04	Add
004	Shaft, Gearshift Fork Guide	1	$11.65	Add
005	Drum, Gearshift(Not Available)	1	$84.96	Add
006	Plate, Drum Cam(Not Available)	1	$6.85	Add
007	Plate, Drum Center	1	$4.96	Add
008	Collar, Drum Center	1	$1.95	Add
009	Stopper, Gearshift Drum(Not Available)	1	$10.04	Add
010	Collar, Gearshift Drum Stopper	1	$4.44	Add
011	Spring, Drum Stopper(Not Available)	1	$2.28	Add
012	Arm, Gearshift(Not Available)	1	$50.12	Add
013	Spindle, Gearshift	1	$38.20	Add
014	Spring, Gearshift	1	$3.61	Add
015	Collar, Gearshift Arm(Not Available)	1	$10.72	Add
016	Spring, Gearshift Arm	1	$1.95	Add
017	Spring, Gearshift Return(Not Available)	1	$3.15	Add
018	Pin, Shift Return Spring	1	$2.52	Add
019	Plate, Point(Not Available)	1	$2.76	Add
020	Washer (12mm)(Not Available)	1	$1.95	Add
021	Washer, Spark Advancer Setting	1	$1.95	Add
022	Bearing, Ball (16005) (Ntn Corp.)	1	$8.04	Add
023	Bolt, Flange (6x25)	1	$1.95	Add
024	Bolt, Flange (6x25)	1	$1.95	Add
025	Roller (4x11.8)	1	$1.95	Add
026	Roller (4x14)(Not Available)	4	$1.95	Add
027	Roller (6x13)(Not Available)	3	$1.95	Add

E22

» Babbitt's Online Home
» Buy OEM Parts Online
» Buy Accessories Online
» New Vehicles
» Preowned Vehicles
» Company Info
» Maps / Hours
» Specials
» Financing
» View Cart
» Checkout

Search:
[Find Accessory] GO
enter sku or name and click "GO"

» OEM PARTS

<<-- Pick New Model

Change Assembly: Carburetor

ZOOM IN ZOOM OUT

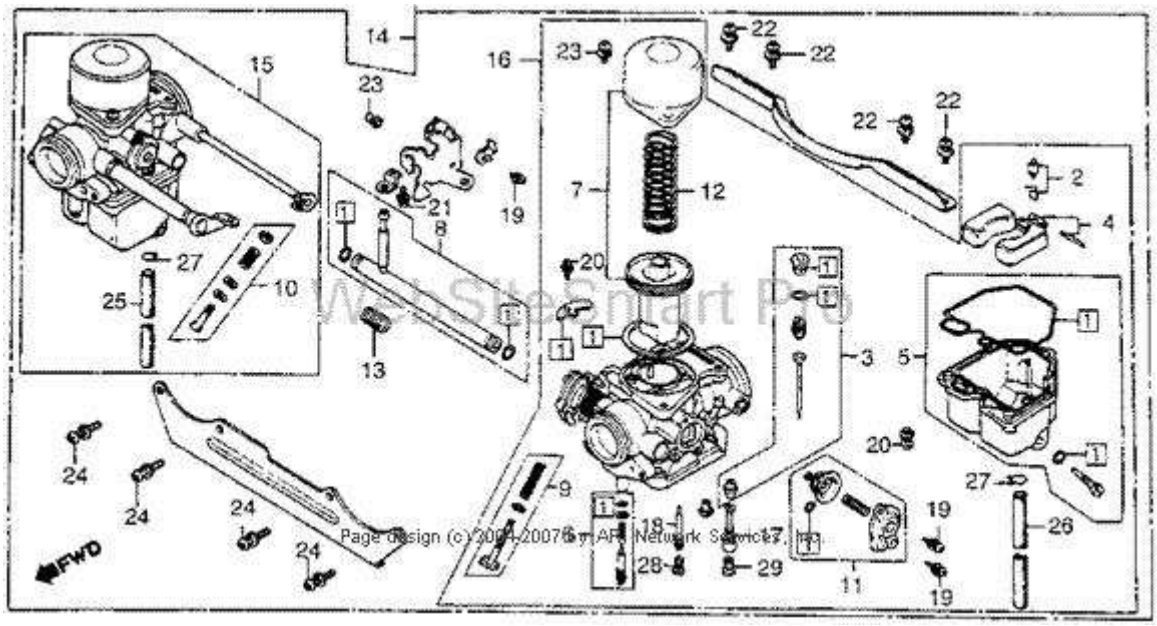

Tag	Description	Req	Price	
001	Gasket Set	2	$21.51	Add
002	Valve Set, Float	2	$17.51	Add

003	Needle Set, Jet(Not Available)	2	$21.50	Add
004	Float Set	2	$39.39	Add
005	Chamber Set, Float	2	$99.18	Add
006	Screw Set a	2	$11.62	Add
007	Piston Set, Vacuum(Not Available)	2	$104.50	Add
008	Joint Set, Fuel(Not Available)	1	$24.36	Add
009	Screw Set B(Not Available)	1	$10.01	Add
010	Screw Set C	1	$7.96	Add
011	Valve Set, Air Cut	1	$84.28	Add
012	Spring, Vacuum Piston(Not Available)	2	$7.18	Add
013	Spring, Compression Coil(Not Available)	1	$3.66	Add
015	Carburetor Assy., R.(Not Available)	1	$185.19	Add
016	Carburetor Assy., L.(Not Available)	1	$194.48	Add
017	Holder, Needle Jet	2	$15.18	Add
018	Nozzle, Main(Not Available)	2	$11.54	Add
019	Screw-Washer (4x12)	5	$1.95	Add
020	Screw-Washer (4x14)	2	$1.95	Add
021	Screw-Washer (4x16)	6	$1.95	Add
022	Screw-Washer (5x12)	4	$1.95	Add
023	Screw-Washer (5x16)	5	$1.95	Add
024	Screw-Washer (6x16)	4	$1.95	Add
025	Bulk Hose, Fuel (3.5x3000)Oem Cut Size: (3.5x480)	1	$6.78	Add
027	Clip, Tube (C6.5)	2	$1.95	Add
028	Jet, Main (#78)	2	$4.96	Add
029	Jet (#112)	2	$4.96	Add

F01

BABBITT'S ONLINE

ALL BRANDS HONDA SUZUKI KAWASAKI SEA-DOO POLARIS ARCTIC CAT CAN-AM

BABBITT'S ONLINE.COM

» View Cart » Checkout » Email: Parts | Sales » (231) 737-4542 »

OEM Parts | Accessories | Apparel | Aftermarket Parts | Contact Us | About Us | Boo

» Babbitt's Online Home
» Buy OEM Parts Online
» Buy Accessories Online
» New Vehicles
» Preowned Vehicles
» Company Info
» Maps / Hours
» Specials
» Financing
» View Cart
» Checkout

Search:
[Find Accessory] GO
enter sku or name and click "GO"

» OEM PARTS

<<-- Pick New Model

Change Assembly: Headlight I

ZOOM IN ZOOM OUT

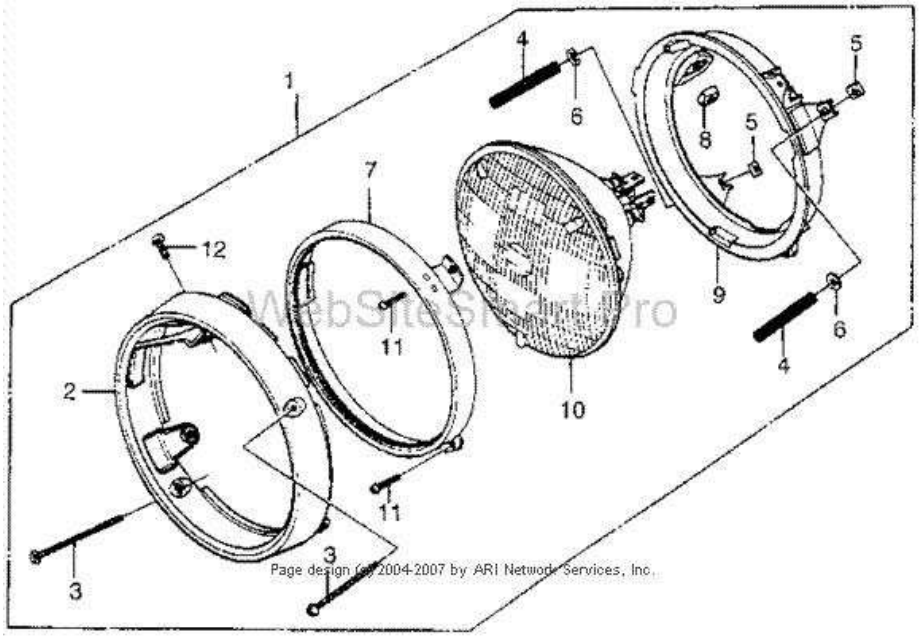

Tag	Description	Req	Price	
001	Headlight Assy. (12v 50/40w) (Stanley)(Not Available)	1	$88.13	Add
002	Rim, Headlight (Stanley)	1	$36.38	Add

003	Screw, Beam Adj	2	$1.95	Add
004	Spring, Beam Adjusting (Stanley)(Not Available)	2	$1.95	Add
005	Nut, Beam Adjusting (Stanley)	2	$1.95	Add
006	Washer, Beam Adjusting	2	$1.95	Add
007	Ring, Retaining	1	$30.42	Add
008	Nut, Unit Holder (Stanley)(Not Available)	1	$1.95	Add
009	Ring, Setting (Stanley)	1	$25.95	Add
010	Sealed Beam Unit	1	$30.98	Add
011	Screw, Pan (3x8)	2	$1.95	Add
012	Screw, Pan (5x12)	1	$1.95	Add

Babbitts Sports Center
3712 Airline Rd.
Muskegon MI 49444
Phone: 231-737-4542

Terms And Conditions | Privacy Policy
Powered by ARI Network Services - WebsiteSmart Pro
(c)2003-2007

F0101

» Babbitt's Online Home
» Buy OEM Parts Online
» Buy Accessories Online
» New Vehicles
» Preowned Vehicles
» Company Info
» Maps / Hours
» Specials
» Financing
» View Cart
» Checkout

Search:
[Find Accessory] GO
enter sku or name and click "GO"

» OEM PARTS

<<-- Pick New Model

Change Assembly: Headlight li

ZOOM IN ZOOM OUT ZOOM RESET

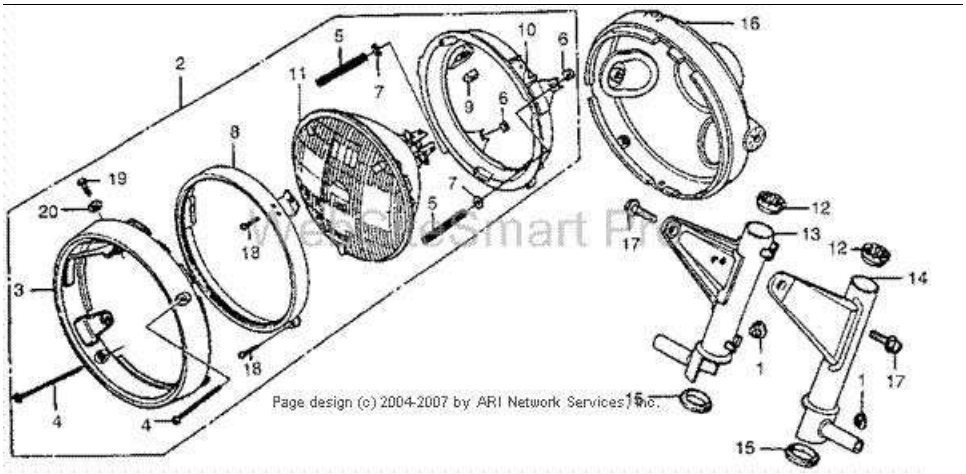

Tag	Description	Req	Price	
003	Rim, Headlight	1	$35.55 ea	Add to Cart
004	Screw, Beam Adj	2	$1.95 ea	Add to Cart
005	Spring, Headlight Beam Adjusting	2	$1.95 ea	Add to Cart
006	Nut, Headlight Beam Adj	1	$1.95 ea	Add to Cart
007	Washer, Beam Adjusting	2	$1.95 ea	Add to Cart
011	Headlight Unit	1	$30.98 ea	Add to Cart
012	Cushion, Fork Cover (Upper)(Not Available)	2	$3.33 ea	Add to Cart
013	Cover, R. Fr. Fork(Not Available)	1	$126.66 ea	Add to Cart
014	Cover, L. Fr. Fork	1	$126.66 ea	Add to Cart
016	Case, Headlight (Stanley)(Not Available)	1	$90.00 ea	Add to Cart
018	Screw, Pan (3x8)	2	$1.95 ea	Add to Cart

019	Screw, Pan (5x8)	2	$1.95 ea	Add to Cart
020	Washer, Spring (5mm)	2	$1.95 ea	Add to Cart

Babbitts Sports Center
3712 Airline Rd.
Muskegon MI 49444
Phone: 231-737-4542
Email:
orderinfo@babbittsonline.com

Terms And Conditions | Privacy Policy
Powered by ARI Network Services - WebsiteSmart Pro v1.0.5
(c)2003-2007

F02

BABBITT'S ONLINE

ALL BRANDS HONDA SUZUKI KAWASAKI SEA-DOO POLARIS ARCTIC CAT CAN-AM

BABBITT'S ONLINE.COM

» View Cart » Checkout » Email: Parts | Sales » (231) 737-4542 »

OEM Parts | Accessories | Apparel | Aftermarket Parts | Contact Us | About Us | Boo

» Babbitt's Online Home
» Buy OEM Parts Online
» Buy Accessories Online
» New Vehicles
» Preowned Vehicles
» Company Info
» Maps / Hours
» Specials
» Financing
» View Cart
» Checkout

Search:
[Find Accessory] GO
enter sku or name and click "GO"

» OEM PARTS

<<-- Pick New Model

Change Assembly: Headlight Case

ZOOM IN ZOOM OUT

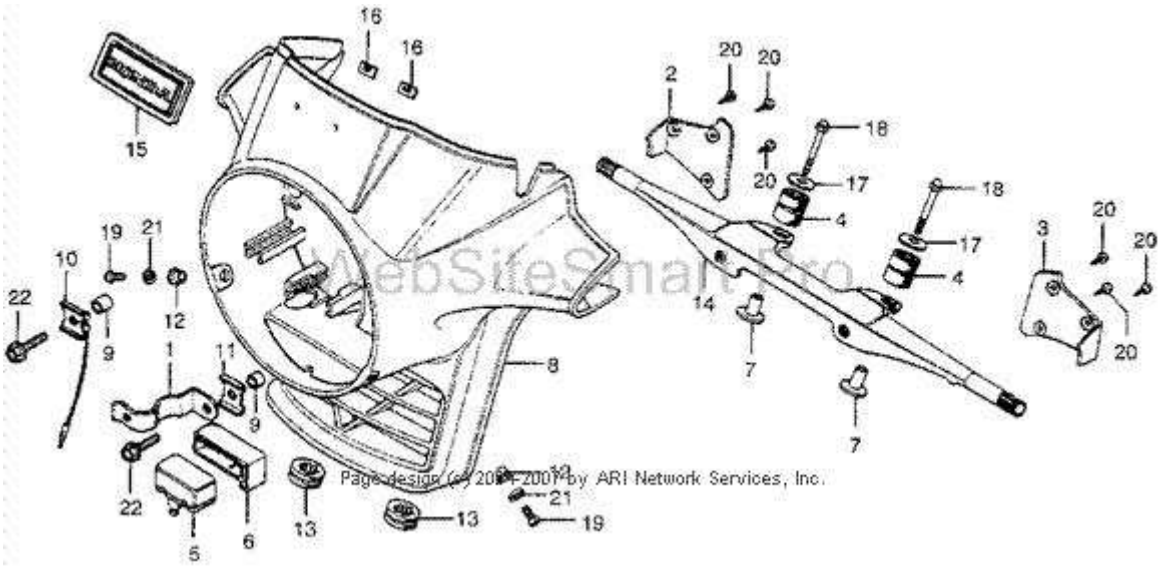

Tag	Description	Req	Price	
001	Clamp B, Wire(Not Available)	1	$3.66	Add
002	Cover, R. Turn Signal(Not Available)	1	$4.35	Add

003	Cover, L. Turn Signal(Not Available)	1	$4.35	Add
004	Rubber, Taillight Mount(Not Available)	2	$1.95	Add
005	Relay, Turn Signal (Mitsuba)	1	$21.34	Add
006	Suspension, Turn Signal Relay(Not Available)	1	$1.95	Add
007	Collar, Headlight Case Stay(Not Available)	2	$2.94	Add
008	Case, Headlight *Nh1*(Black)(Not Available)	1	$81.33	Add
008	Case, Headlight *R8cs*(Candy Presto Red)(Not Available)	1	$90.95	Add
009	Collar, Headlight Case(Not Available)	2	$1.95	Add
010	Washer, Headlight Case(Not Available)	1	$1.95	Add
011	Washer, Headlight Case	1	$1.95	Add
012	Collar, Headlight Setting	2	$1.95	Add
013	Rubber, Headlight Case Setting	2	$1.95	Add
014	Stay, Headlight Case (Upper)	1	$37.95	Add
015	Emblem, Headlight Case(Not Available)	1	$7.60	Add
016	Nut, Speed (3mm)	2	$1.95	Add
017	Washer (6.5x20)	2	$1.95	Add
018	Bolt, Cap (6x40)(Not Available)	2	$1.95	Add
019	Screw, Pan (5x16)	2	$1.95	Add
020	Screw, Tapping (3x12)(Not Available)	6	$1.95	Add
021	Washer, Spring (5mm)	2	$1.95	Add
022	Bolt, Flange (8x20)	2	$1.95	Add

F03

BABBITT'S ONLINE

ALL BRANDS HONDA SUZUKI KAWASAKI SEA-DOO POLARIS ARCTIC CAT CAN-AM

BABBITT'S ONLINE.COM

» View Cart » Checkout » Email: Parts | Sales » (231) 737-4542 »

OEM Parts | Accessories | Apparel | Aftermarket Parts | Contact Us | About Us | Boo

» Babbitt's Online Home
» Buy OEM Parts Online
» Buy Accessories Online
» New Vehicles
» Preowned Vehicles
» Company Info
» Maps / Hours
» Specials
» Financing
» View Cart
» Checkout

Search:
[Find Accessory] GO
enter sku or name and click "GO"

» OEM PARTS

<<-- Pick New Model

Change Assembly: Speedometer @ Tachometer I

ZOOM IN ZOOM OUT

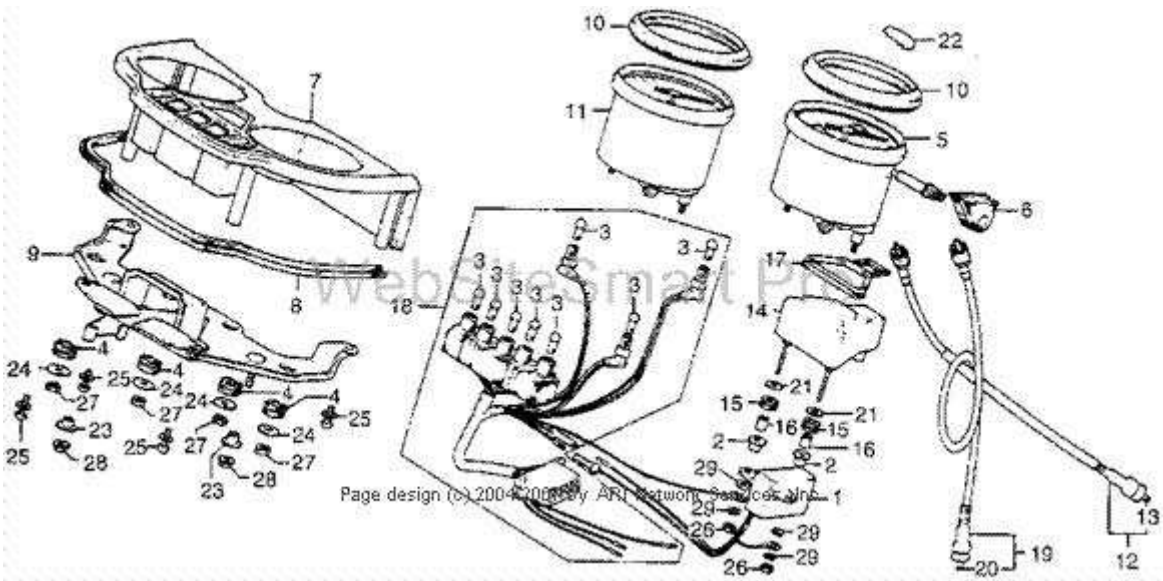

Tag	Description	Req	Price	
001	Regulator (7v)(Not Available)	1	$57.19	Add
002	Collar, Regulator(Not Available)	2	$1.95	Add

003	Bulb, Dash (12v3.4w) (Imasen)	8	$1.95	Add
004	Rubber, Meter Cushion(Not Available)	4	$1.95	Add
006	Grommet, Trip Knob(Not Available)	1	$1.95	Add
007	Panel, Meter Setting(Not Available)	1	$62.60	Add
008	Gasket, Meter Panel(Not Available)	1	$8.55	Add
009	Bracket, Meter(Not Available)	1	$32.60	Add
010	Ring, Meter Cushion(Not Available)	2	$7.58	Add
011	Tachometer Assy	1	$160.10	Add
012	Cable Assy., Tachometer	1	$13.62	Add
015	Rubber B, Mounting(Not Available)	2	$1.95	Add
016	Collar, Temperature Meter(Not Available)	2	$1.95	Add
017	Rubber, Temperature Meter(Not Available)	1	$2.94	Add
018	Socket Assy., Rubber(Not Available)	1	$83.88	Add
019	Cable Assy., Speedometer	1	$13.04	Add
021	Washer C, Parking Brake	2	$1.95	Add
022	Label, Break In Caution	1	$1.95	Add
023	Collar, Fr. Fender Setting	2	$1.95	Add
024	Washer (18mm)	4	$1.95	Add
025	Screw-Washer (4x12)	4	$1.95	Add
026	Nut, Hex. (4mm)	2	$1.95	Add
027	Nut, Hex. (6mm)	4	$1.95	Add
027	Nut, Hex. (6mm)	4	$1.95	Add
028	Nut, Flange (6mm)	2	$1.95	Add
029	Washer, Plain (4mm)	4	$1.95	Add

F0301

BABBITT'S ONLINE

ALL BRANDS | HONDA | SUZUKI | KAWASAKI | SEA-DOO | POLARIS | ARCTIC CAT | CAN-AM | HELMETS

BABBITT'S ONLINE.COM

» View Cart » Checkout » Email: Orders | Sales » (231) 737-4542 »

OEM Parts | Accessories | Apparel | Aftermarket Parts | Contact Us | About Us | Bookmark

» Babbitt's Online Home
» Buy OEM Parts Online
» Buy Accessories Online
» New Vehicles
» Preowned Vehicles
» Company Info
» Maps / Hours
» Specials
» Financing
» View Cart
» Checkout

Search:
[Find Accessory] GO
enter sku or name and click "GO"

» OEM PARTS

<<-- Pick New Model

Change Assembly: Speedometer @ Tachometer li

ZOOM IN ZOOM OUT ZOOM RESET

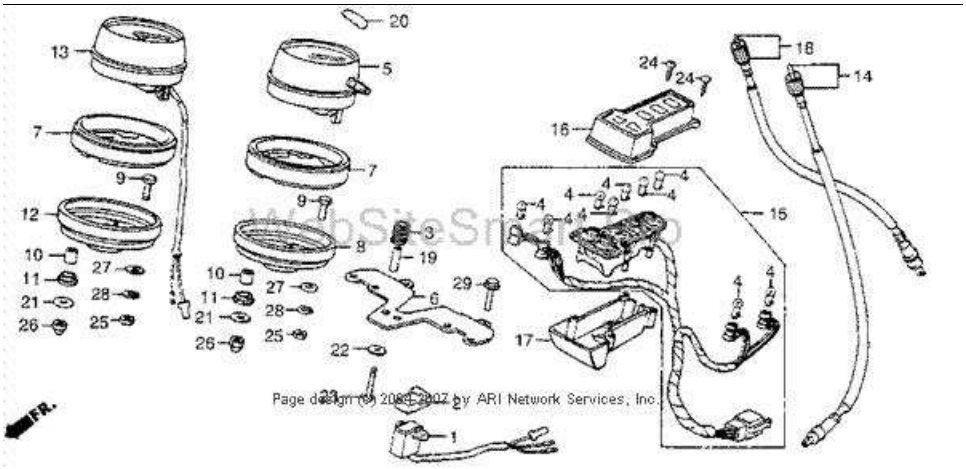

Tag	Description	Req	Price	
001	Regulator (7v)	1	$57.74 ea	Add to Cart
002	Suspension, Regulator(Not Available)	1	$2.24 ea	Add to Cart
003	Grommet, Meter Bracket(Not Available)	2	$2.06 ea	Add to Cart
004	Bulb, Dash (12v3.4w) (Imasen)	9	$1.95 ea	Add to Cart
006	Bracket, Meter(Not Available)	1	$38.95 ea	Add to Cart
007	Rubber, Speedometer	2	$10.84 ea	Add to Cart
008	Plate, Speedometer (Lower)	1	$21.86 ea	Add to Cart
009	Bolt, Instrument Setting (6mm)(Not Available)	4	$1.95 ea	Add to Cart
010	Collar, Instrument Setting	4	$2.82 ea	Add to Cart
011	Rubber, Meter Setting	4	$1.95 ea	Add to Cart
012	Plate, Tachometer (Lower)	1	$21.86 ea	Add to Cart
013	Tachometer Assy.(Not Available)	1	$273.15 ea	Add to Cart

014	Cable Assy., Tachometer	1	$13.62 ea	Add to Cart
015	Socket Assy., Rubber (Nippon Seiki)	1	$108.96 ea	Add to Cart
016	Case, Pilot (Upper)(Not Available)	1	$18.06 ea	Add to Cart
017	Case, Pilot (Lower)(Not Available)	1	$9.05 ea	Add to Cart
018	Cable Assy., Speedometer	1	$13.04 ea	Add to Cart
019	Collar, Number Bracket Setting(Not Available)	2	$1.95 ea	Add to Cart
020	Label, Break In Caution	1	$1.95 ea	Add to Cart
021	Washer (6.5x18)	4	$1.95 ea	Add to Cart
022	Washer (20mm)	2	$1.95 ea	Add to Cart
023	Screw, Pan (5x28)	2	$1.95 ea	Add to Cart
024	Screw, Tapping (4x12)	4	$1.95 ea	Add to Cart
025	Nut, Hex. (6mm)	4	$1.95 ea	Add to Cart
026	Nut, Cap (6mm)	4	$1.95 ea	Add to Cart
027	Washer, Plain (6mm)	4	$1.95 ea	Add to Cart
028	Washer, Spring (6mm)	4	$1.95 ea	Add to Cart
029	Bolt, Flange (6x20)	2	$1.95 ea	Add to Cart

F04

BABBITT'S ONLINE

ALL BRANDS HONDA SUZUKI KAWASAKI SEA-DOO POLARIS ARCTIC CAT CAN-AM

BABBITT'S ONLINE.COM

» View Cart » Checkout » Email: Parts | Sales » (231) 737-4542 »

OEM Parts | Accessories | Apparel | Aftermarket Parts | Contact Us | About Us | Boo

» Babbitt's Online Home
» Buy OEM Parts Online
» Buy Accessories Online
» New Vehicles
» Preowned Vehicles
» Company Info
» Maps / Hours
» Specials
» Financing
» View Cart
» Checkout

Search:
[Find Accessory] GO
enter sku or name and click "GO"

» OEM PARTS

<<-- Pick New Model

Change Assembly: Handle Lever @ Switch @ Cable

ZOOM IN ZOOM OUT

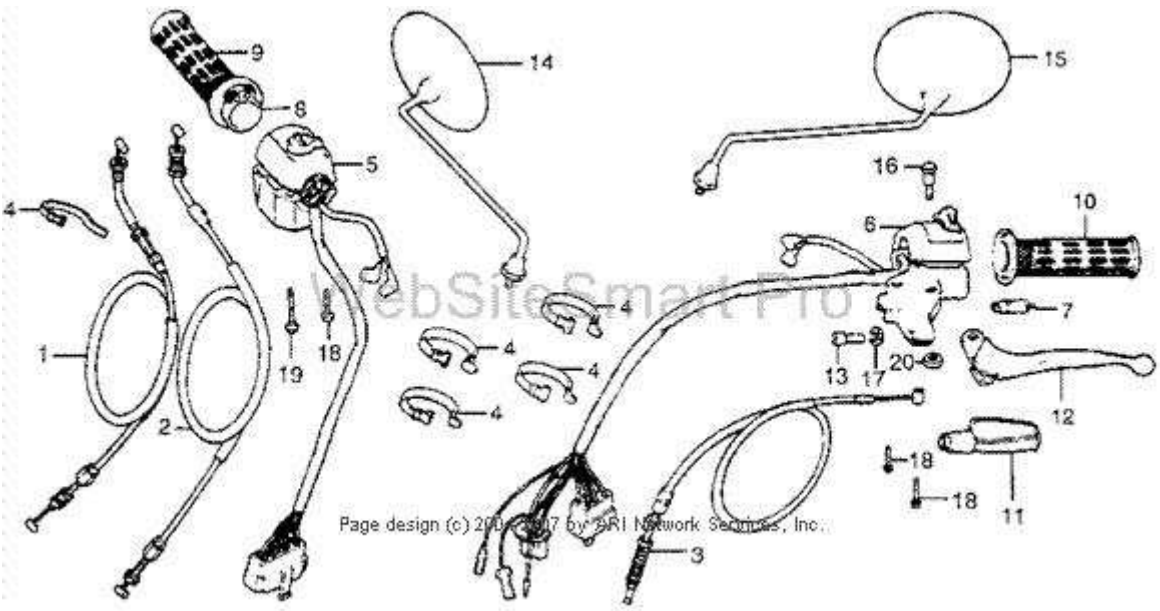

Tag	Description	Req	Price	
001	Cable a, Throttle	1	$20.53	Add
002	Cable B, Throttle	1	$18.66	Add

003	Cable, Clutch	1	$15.79	Add
004	Band B1, Cable	5	$1.95	Add
005	Switch Assy., Starter Stop (Toyo)(Not Available)	1	$66.20	Add
006	Switch Assy., Turn Signal (Toyo)	1	$87.29	Add
007	Switch, Fr. Lever	1	$11.75	Add
008	Pipe, Throttle Grip	1	$10.56	Add
009	Grip, R. Handlebar	1	$5.86	Add
010	Grip, L. Handlebar	1	$5.86	Add
012	Lever, L. Handlebar	1	$14.47	Add
013	Bolt, Cable Adjusting	1	$4.48	Add
014	Mirror, R	1	$17.22	Add
015	Mirror, L	1	$17.22	Add
016	Bolt, Handlebar Lever Pivot	1	$1.95	Add
017	Nut, Fixing	1	$4.10	Add
018	Screw, Pan (5x25)	3	$1.95	Add
019	Screw, Pan (5x35)	1	$1.95	Add
020	Nut, Hex. (6mm)	1	$1.95	Add
020	Nut, Hex. (6mm)	1	$1.95	Add

F05

BABBITT'S ONLINE

ALL BRANDS HONDA SUZUKI KAWASAKI SEA-DOO POLARIS ARCTIC CAT CAN-AM

BABBITT'S ONLINE.COM

» View Cart » Checkout » Email: Parts | Sales » (231) 737-4542 »

OEM Parts | Accessories | Apparel | Aftermarket Parts | Contact Us | About Us | Boo

» Babbitt's Online Home
» Buy OEM Parts Online
» Buy Accessories Online
» New Vehicles
» Preowned Vehicles
» Company Info
» Maps / Hours
» Specials
» Financing
» View Cart
» Checkout

Search:
[Find Accessory] GO
enter sku or name and click "GO"

» OEM PARTS

<<-- Pick New Model

Change Assembly: Front Master Cylinder I

ZOOM IN ZOOM OUT

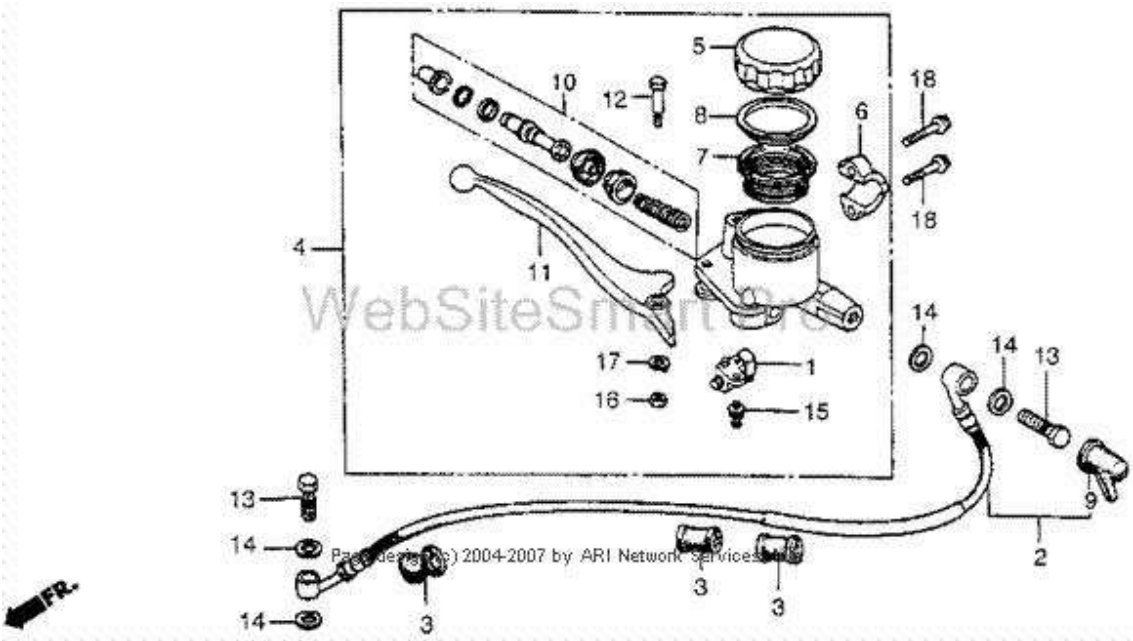

Tag	Description	Req	Price	
001	Switch Assy., Fr. Stop	1	$13.90	Add
002	Hose Assy., Fr. Brake (Nichirin)(Not Available)	1	$38.02	Add

003	Bush, Brake Hose	3	$2.33	Add
004	Master Cylinder Assy	1	$265.88	Add
005	Cap, Oil Cup	1	$17.22	Add
006	Holder, Master Cylinder	1	$15.71	Add
007	Diaphragm	1	$4.83	Add
008	Plate, Diaphragm	1	$2.24	Add
009	Boot, Master Cylinder	1	$4.48	Add
010	Master Cylinder Set	1	$33.98	Add
011	Lever, R. Handlebar	1	$17.22	Add
012	Bolt, Handlebar Lever Pivot(Not Available)	1	$4.51	Add
013	Bolt, Oil	2	$4.71	Add
014	Washer, Oil Bolt	4	$1.95	Add
015	Screw-Washer (4x12)	1	$1.95	Add
016	Nut, Hex. (6mm)	1	$1.95	Add
017	Washer, Plain (6mm)	1	$1.95	Add
018	Bolt, Flange (6x25)	2	$1.95	Add

F0501

BABBITT'S ONLINE

ALL BRANDS | HONDA | SUZUKI | KAWASAKI | SEA-DOO | POLARIS | ARCTIC CAT | CAN-AM | HELMETS

BABBITT'S ONLINE.COM

» View Cart » Checkout » Email: Orders | Sales » (231) 737-4542 »

OEM Parts | Accessories | Apparel | Aftermarket Parts | Contact Us | About Us | Bookmark

» Babbitt's Online Home
» Buy OEM Parts Online
» Buy Accessories Online
» New Vehicles
» Preowned Vehicles
» Company Info
» Maps / Hours
» Specials
» Financing
» View Cart
» Checkout

Search:
[Find Accessory] GO
enter sku or name and click "GO"

» OEM PARTS

<<-- Pick New Model

Change Assembly: Front Master Cylinder li

ZOOM IN ZOOM OUT ZOOM RESET

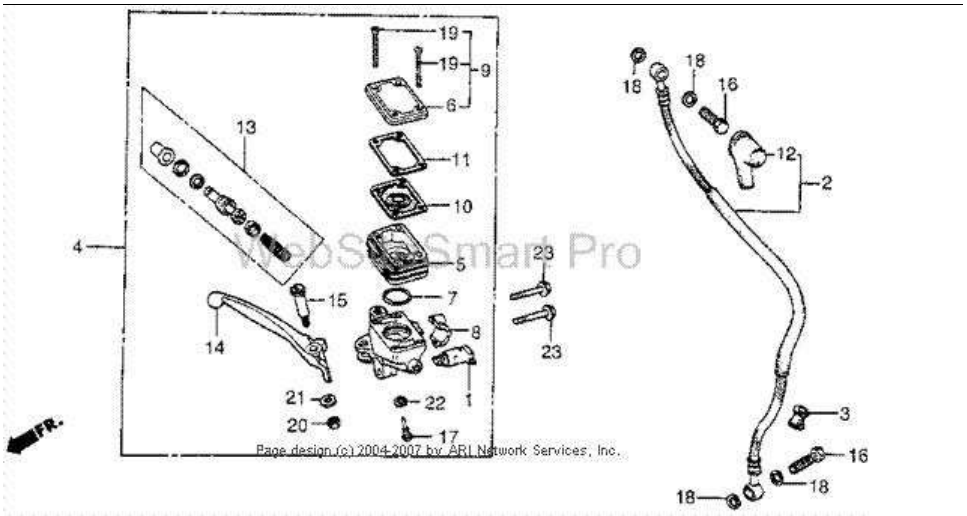

Tag	Description	Req	Price	
001	Switch Assy., Fr. Stop	1	$12.42 ea	Add to Cart
002	Hose Assy., Fr. Brake(Not Available)	1	$59.30 ea	Add to Cart
003	Bush, Brake Hose	3	$2.33 ea	Add to Cart
005	Cup, Oil	1	$23.82 ea	Add to Cart
007	O-Ring (39.7x3.5)	1	$4.44 ea	Add to Cart
008	Holder, Master Cylinder	1	$15.71 ea	Add to Cart
009	Cap Set, Oil Cup	1	$33.41 ea	Add to Cart
010	Diaphragm	1	$10.36 ea	Add to Cart
010	Diaphragm	1	$10.36 ea	Add to Cart
011	Plate, Diaphragm	1	$6.52 ea	Add to Cart
012	Boot, Master Cylinder	1	$4.23 ea	Add to Cart
013	Master Cylinder Set	1	$34.36 ea	Add to Cart

014	Lever, R. Handlebar	1	$17.22 ea	Add to Cart
015	Bolt, R. Handlebar Control Lever Pivot	1	$4.80 ea	Add to Cart
016	Bolt, Oil	2	$4.71 ea	Add to Cart
017	Screw, Pan (4x13.5)(Not Available)	1	$1.95 ea	Add to Cart
018	Washer, Oil Bolt	4	$1.95 ea	Add to Cart
019	Screw, Flat (4x37)	4	$1.95 ea	Add to Cart
020	Nut, Hex. (6mm)	1	$1.95 ea	Add to Cart
021	Washer, Plain (6mm)	1	$1.95 ea	Add to Cart
022	Washer, Spring (4mm)	1	$1.95 ea	Add to Cart

Babbitts Sports Center
3712 Airline Rd.
Muskegon MI 49444
Phone: 231-737-4542
Email:
orderinfo@babbittsonline.com

Terms And Conditions | Privacy Policy
Powered by ARI Network Services - WebsiteSmart Pro v1.0.5
(c)2003-2007

F06

BABBITT'S ONLINE

ALL BRANDS HONDA SUZUKI KAWASAKI SEA-DOO POLARIS ARCTIC CAT CAN-AM

BABBITT'S ONLINE.COM

» View Cart » Checkout » Email: Parts | Sales » (231) 737-4542 »

OEM Parts | Accessories | Apparel | Aftermarket Parts | Contact Us | About Us | Boo

» Babbitt's Online Home
» Buy OEM Parts Online
» Buy Accessories Online
» New Vehicles
» Preowned Vehicles
» Company Info
» Maps / Hours
» Specials
» Financing
» View Cart
» Checkout

Search:
[Find Accessory] GO
enter sku or name and click "GO"

» OEM PARTS

<<-- Pick New Model

Change Assembly: Handlebar @ Top Bridge @ Key

ZOOM IN ZOOM OUT

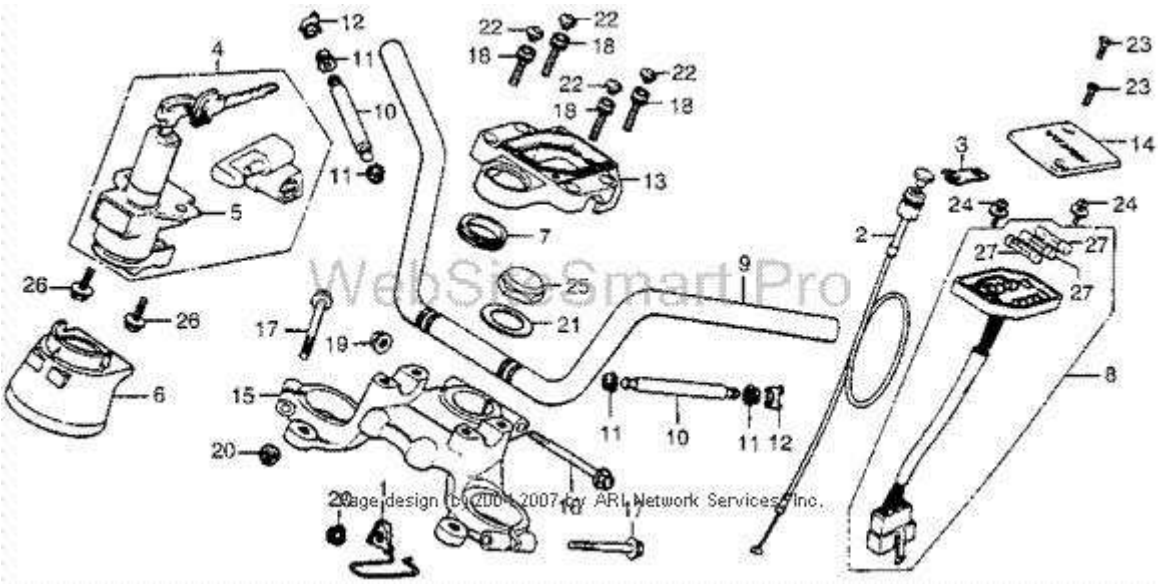

Tag	Description	Req	Price	
002	Cable, Choke	1	$18.62	Add
003	Bracket, Choke Cable(Not Available)	1	$1.95	Add

004	Lock Set	1	$195.26	Add
005	Switch Assy., Combination #Amp; Lock	1	$107.90	Add
007	Rubber, Ignition Switch Setting(Not Available)	1	$1.95	Add
008	Plate Assy., Fuse (Stanley)(Not Available)	1	$41.73	Add
009	Handlebar(Not Available)	1	$50.04	Add
010	Weight, Handle	2	$10.46	Add
011	Rubber, Handle Weight	4	$1.95	Add
012	Ring, Handle Weight Snap	2	$3.70	Add
013	Holder, Handle (Upper)(Not Available)	1	$65.99	Add
014	Cover, Handlebar Holder(Not Available)	1	$14.74	Add
015	Bridge, Fork Top *Nh105*(Mat Black)(Not Available)	1	$114.38	Add
016	Bolt, Flange (8x72)(Not Available)	1	$1.95	Add
017	Bolt, Flange (7x54)	2	$3.14	Add
018	Bolt, Hex. Socket (8x32)	4	$3.14	Add
019	Nut, Flange (8mm)	1	$1.95	Add
020	Nut, Flange (7mm)	2	$2.62	Add
021	Washer, Steering Stem	1	$2.49	Add
022	Cap, Socket Bolt	4	$1.95	Add
023	Screw, Oval (5x16)	2	$1.95	Add
024	Screw-Washer (4x12)	2	$1.95	Add
025	Nut, Steering Stem	1	$10.60	Add
025	Nut, Steering Stem	1	$10.60	Add
026	Bolt, Flange (6x14)	2	$1.95	Add
027	Fuse B (10a)	3	$1.95	Add

F07

» OEM PARTS

<<-- Pick New Model

Change Assembly: Steering Stem @ Horn

ZOOM IN ZOOM OUT

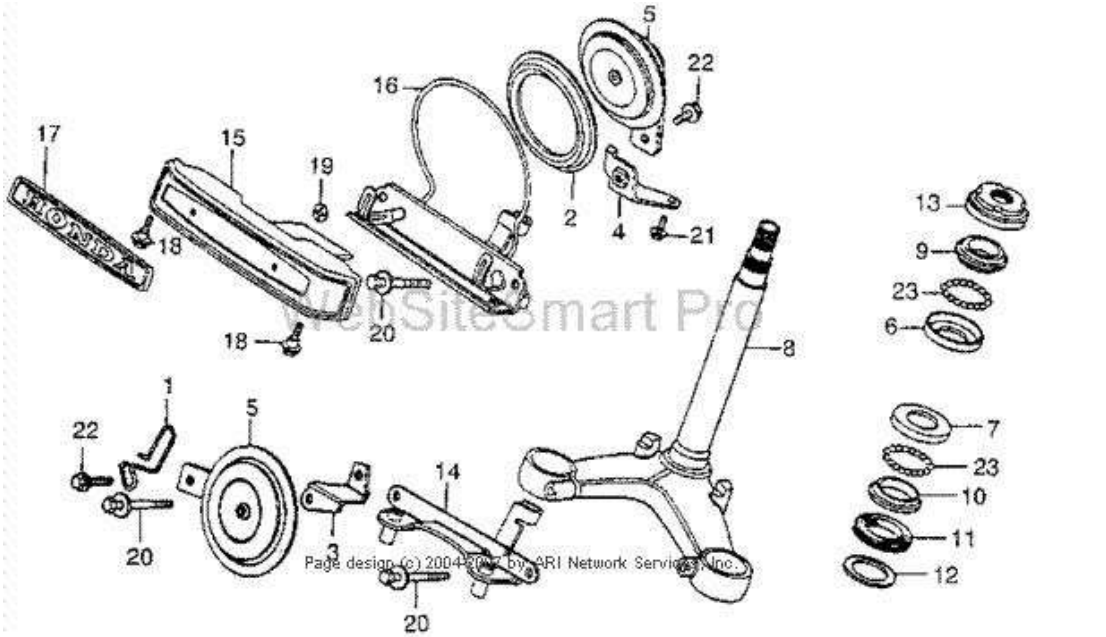

Tag	Description	Req	Price	
001	Clamp, Tachometer Cable(Not Available)	1	$2.56	Add
003	Stay, Horn(Not Available)	1	$5.60	Add

005	Horn (High)	1	$45.02	Add
006	Race, Steering Ball (Upper)	1	$10.08	Add
007	Race, Steering Ball (Lower)	1	$9.62	Add
007	Race, Steering Ball (Lower)	1	$9.62	Add
008	Stem, Steering *Nh1*(Black)	1	$181.35	Add
009	Race, Steering Cone (Upper)	1	$12.73	Add
010	Race, Steering Cone (Lower)	1	$9.89	Add
011	Dust Seal, Steering Head	1	$1.95	Add
012	Washer, Steering Head Dust Seal	1	$1.95	Add
013	Thread, Steering Head (Upper)	1	$15.50	Add
014	Stay, Headlight Case (Lower)	1	$19.55	Add
020	Bolt-Washer (8x40)	2	$1.95	Add
022	Bolt, Flange (8x16)	1	$1.95	Add
023	Ball, Steel (#8) (1/4)	37	$1.95	Add

Babbitts Sports Center
3712 Airline Rd.
Muskegon MI 49444
Phone: 231-737-4542

F08

» OEM PARTS

<<-- Pick New Model

Change Assembly: Front Fender

ZOOM IN ZOOM OUT

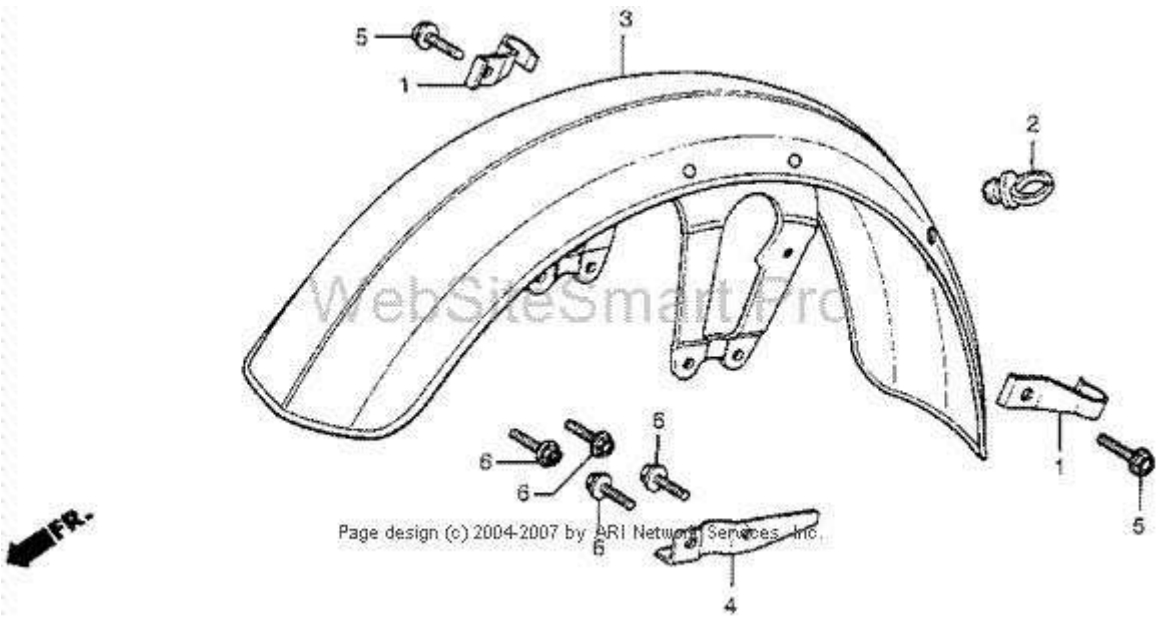

Tag	Description	Req	Price	
001	Clamp a, Brake Hose(Not Available)	1	$2.30	Add
002	Grommet, Cable	1	$1.95	Add

003	Fender, Fr.(Not Available)	1	$112.78	Add
004	Guide, L. Fr. Fender(Not Available)	1	$4.19	Add
005	Bolt, Flange (6x10)	1	$1.95	Add
006	Bolt, Flange (6x16)	4	$1.95	Add

Babbitts Sports Center

3712 Airline Rd.
Muskegon MI 49444
Phone: 231-737-4542

Terms And Conditions | Privacy Policy
Powered by ARI Network Services - WebsiteSmart Pro
(c)2003-2007

F09

» OEM PARTS

<<-- Pick New Model

Change Assembly: Front Fork

ZOOM IN ZOOM OUT

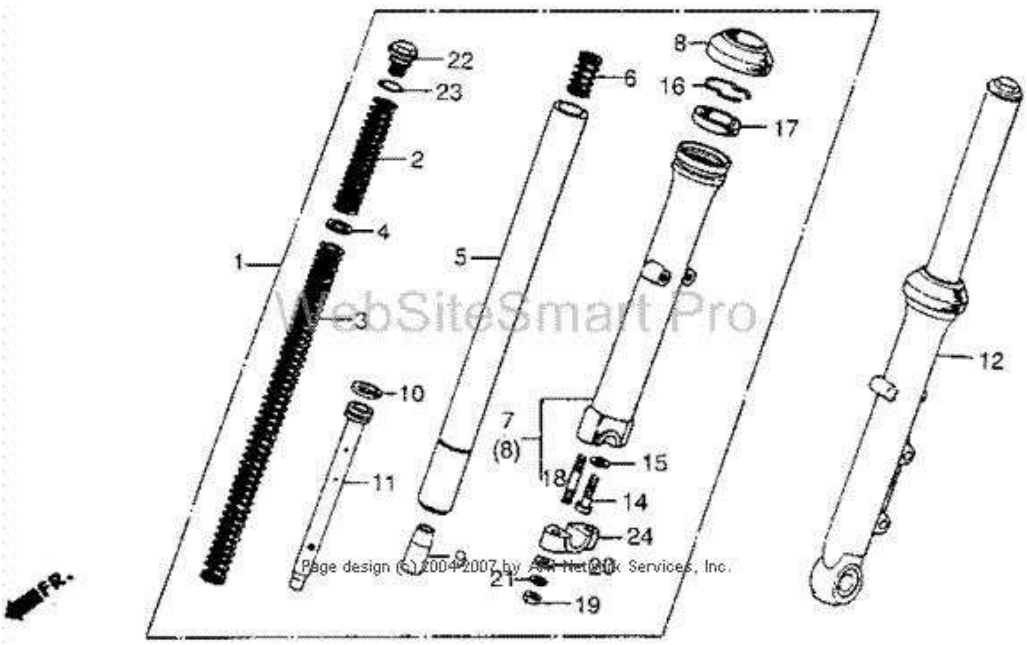

Tag	Description	Req	Price	
001	Fork Assy., R. Fr. (Showa)(Not Available)	1	$318.12	Add
002	Spring a, Fr. Fork (Showa)(Not Available)	2	$10.70	Add

003	Spring B, Fr. Fork (Showa)(Not Available)	2	$34.91	Add
004	Plate, Spring Joint(Not Available)	2	$1.95	Add
005	Pipe, Fr. Fork (Showa)(Not Available)	2	$135.78	Add
006	Spring, Fr. Fork Rebound	2	$2.14	Add
007	Case, R. (Lower)(Not Available)	1	$124.25	Add
008	Dust Seal, Fr. Fork	2	$12.58	Add
009	Piece, Oil Locking	2	$14.72	Add
010	Ring, Piston	2	$2.60	Add
011	Pipe, Seat (Showa)	2	$29.48	Add
012	Fork Assy., L. Fr. (Showa)	1	$369.42	Add
013	Case, L. (Lower)	1	$180.35	Add
014	Bolt, Socket (8mm) (Showa)	2	$2.86	Add
015	Washer, Special (8mm)	2	$1.95	Add
016	Ring, Oil Seal Stopper	2	$1.95	Add
017	Oil Seal (33x46x11)	2	$6.17	Add
018	Bolt, Stud (8x50)	2	$1.95	Add
018	Bolt 2, Stud (8x32)	2	$1.95	Add
019	Nut, Hex. (8mm)	2	$1.95	Add
020	Washer, Plain (8mm)	2	$1.95	Add
021	Washer, Spring (8mm)	2	$1.95	Add
022	Bolt D1, Fork	2	$4.57	Add
023	O-Ring (23x2.4)	2	$1.95	Add
024	Holder 1c, Fr. Fork Axle	1	$6.66	Add

F10

BABBITT'S ONLINE

ALL BRANDS HONDA SUZUKI KAWASAKI SEA-DOO POLARIS ARCTIC CAT CAN-AM

BABBITT'S ONLINE.COM

» View Cart » Checkout » Email: Parts | Sales » (231) 737-4542 »

OEM Parts | Accessories | Apparel | Aftermarket Parts | Contact Us | About Us | Boo

» Babbitt's Online Home
» Buy OEM Parts Online
» Buy Accessories Online
» New Vehicles
» Preowned Vehicles
» Company Info
» Maps / Hours
» Specials
» Financing
» View Cart
» Checkout

Search:
[Find Accessory] GO
enter sku or name and click "GO"

» OEM PARTS

<<-- Pick New Model

Change Assembly: Front Brake Caliper

ZOOM IN ZOOM OUT

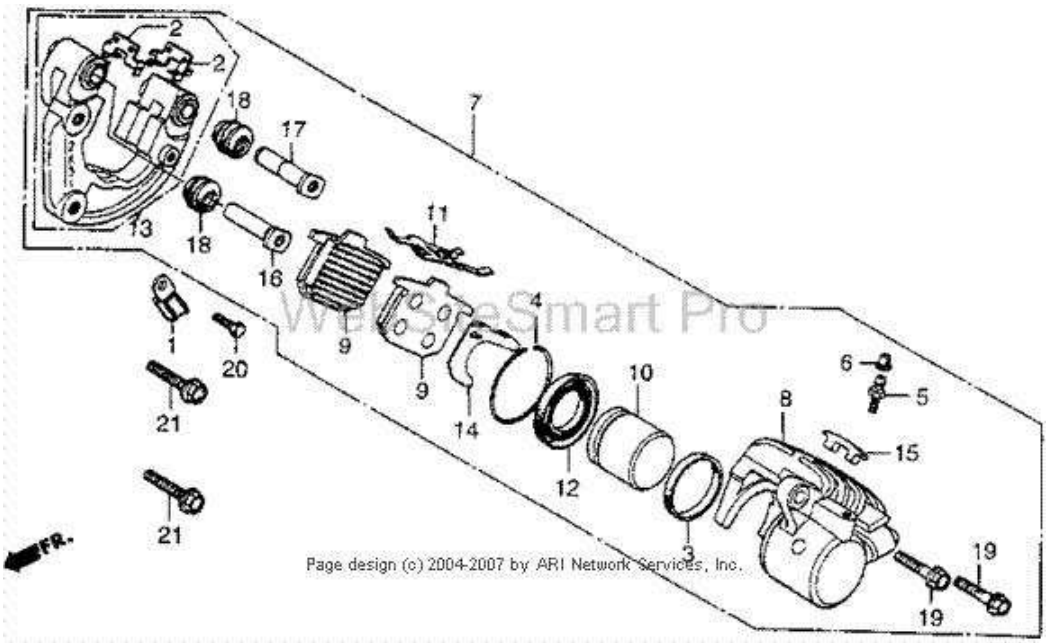

Tag	Description	Req	Price	
001	Clip, Cable	1	$2.28	Add
002	Retainer, Rr. Bracket (Nisshin)	2	$4.55	Add

003	Seal, Piston	1	$5.94	Add
004	Clip, Dust Cover	1	$6.74	Add
005	Screw, Bleeder	1	$3.66	Add
006	Cap, Bleeder Screw	1	$1.95	Add
007	Caliper Assy., L. Fr. (Nisshin)(Not Available)	1	$236.04	Add
007	Caliper Assy., L. Fr. (Nisshin)(Not Available)	1	$236.04	Add
007	Caliper Assy., L. Fr. (Nisshin)(Not Available)	1	$232.55	Add
008	Caliper, L.(Not Available)	1	$92.94	Add
009	Pad (Nisshin)(See Kit P/N--End of Block) (Not Available)	2	$14.93	Add
009	Pad (Jb) (Nisshin)(See Kit P/N--End of Block) (Not Available)	2	$14.70	Add
010	Piston	1	$61.67	Add
011	Spring, Pad	1	$8.35	Add
012	Boot, Piston	1	$12.82	Add
013	Bracket, L. Fr. (Nisshin)(Not Available)	1	$119.81	Add
014	Shim a, Pad	1	$4.14	Add
015	Cap, Indicator	1	$3.93	Add
016	Pin a (Nisshin)	1	$9.40	Add
017	Pin B (Nisshin)	1	$17.21	Add
018	Cover, Dust	2	$4.34	Add
019	Bolt (8x25)	2	$3.14	Add
020	Bolt, Hex. (6x10)	1	$1.95	Add
021	Bolt, Flange (10x32)	2	$1.95	Add
NI	Pad Set, Brake	1	$46.68	Add
NI	Pad Set, Brake	1	$46.68	Add
NI	Brake Pad Kit	1	$46.68	Add

F11

BABBITT'S ONLINE

ALL BRANDS HONDA SUZUKI KAWASAKI SEA-DOO POLARIS ARCTIC CAT CAN-AM

BABBITT'S ONLINE.COM

» View Cart » Checkout » Email: Parts | Sales » (231) 737-4542 »

OEM Parts | Accessories | Apparel | Aftermarket Parts | Contact Us | About Us | Boo

» Babbitt's Online Home
» Buy OEM Parts Online
» Buy Accessories Online
» New Vehicles
» Preowned Vehicles
» Company Info
» Maps / Hours
» Specials
» Financing
» View Cart
» Checkout

Search:
[Find Accessory] GO
enter sku or name and click "GO"

» OEM PARTS

<<-- Pick New Model

Change Assembly: Front Wheel @ Disc

ZOOM IN ZOOM OUT

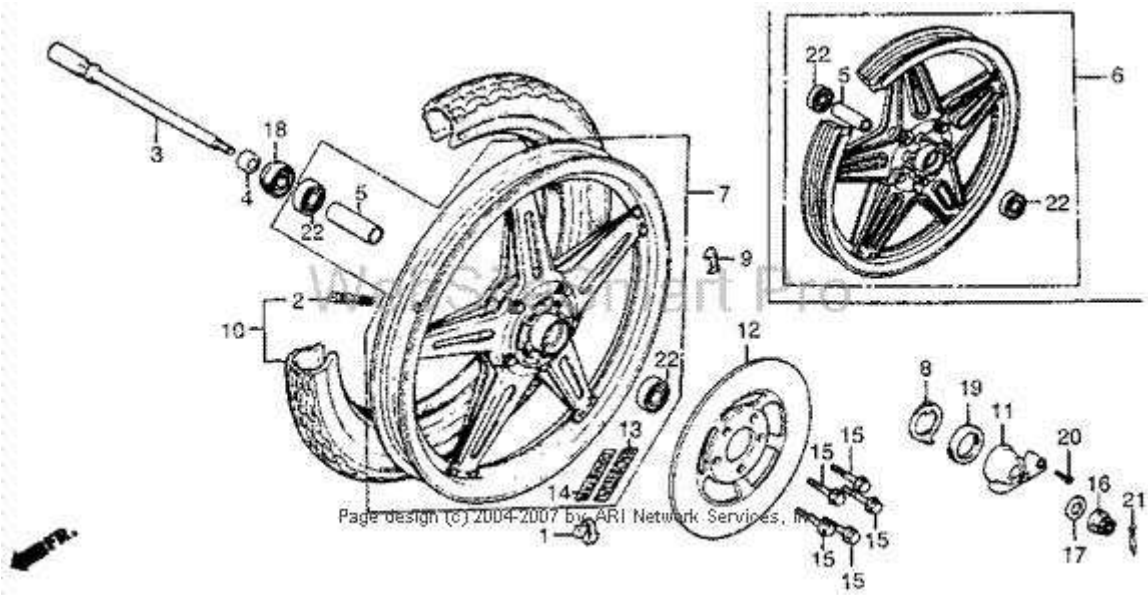

Tag	Description	Req	Price	
001	Weight, Balance (20g)	1	$6.88	Add
001	Weight, Balance (30g)	1	$6.88	Add

002	Valve, Rim (Taiheiyo)	1	$1.95	Add
002	Valve, Rim (Schrader)	1	$1.95	Add
003	Axle, Fr. Wheel(Not Available)	1	$21.19	Add
004	Collar, Fr. Wheel	1	$5.86	Add
005	Collar, Fr. Axle Distance	1	$9.24	Add
006	Wheel, Fr.(Not Available)	1	$244.20	Add
008	Retainer, Gear Box	1	$3.20	Add
009	Mark, Fr. Spoke Plate(Not Available)	10	$6.43	Add
010	Tire Assy., Fr. (3.25s19) (Bs)(Not Available)	1	$45.62	Add
011	Box Assy., Speedometer Gear	1	$61.32	Add
012	Disk, Fr. Brake	1	$375.30	Add
015	Bolt, Ubs (8x33)	5	$2.52	Add
016	Nut, Axle (14mm)	1	$4.57	Add
017	Washer (15.2x25)	1	$1.95	Add
018	Oil Seal (26x42x7)	1	$5.64	Add
019	Dust Seal (40x50x5) (Arai)	1	$5.30	Add
020	Screw, Oval (5x16)	1	$1.95	Add
021	Pin, Cotter (3.0x45)	1	$1.95	Add
022	Bearing, Radial Ball (6302z)	2	$6.33	Add

F12

BABBITT'S ONLINE

ALL BRANDS HONDA SUZUKI KAWASAKI SEA-DOO POLARIS ARCTIC CAT CAN-AM

BABBITT'S ONLINE.COM

» View Cart » Checkout » Email: Parts | Sales » (231) 737-4542 »

OEM Parts | Accessories | Apparel | Aftermarket Parts | Contact Us | About Us | Boo

» Babbitt's Online Home
» Buy OEM Parts Online
» Buy Accessories Online
» New Vehicles
» Preowned Vehicles
» Company Info
» Maps / Hours
» Specials
» Financing
» View Cart
» Checkout

Search:
[Find Accessory] GO
enter sku or name and click "GO"

» OEM PARTS

<<-- Pick New Model

Change Assembly: Rear Brake Panel

ZOOM IN ZOOM OUT

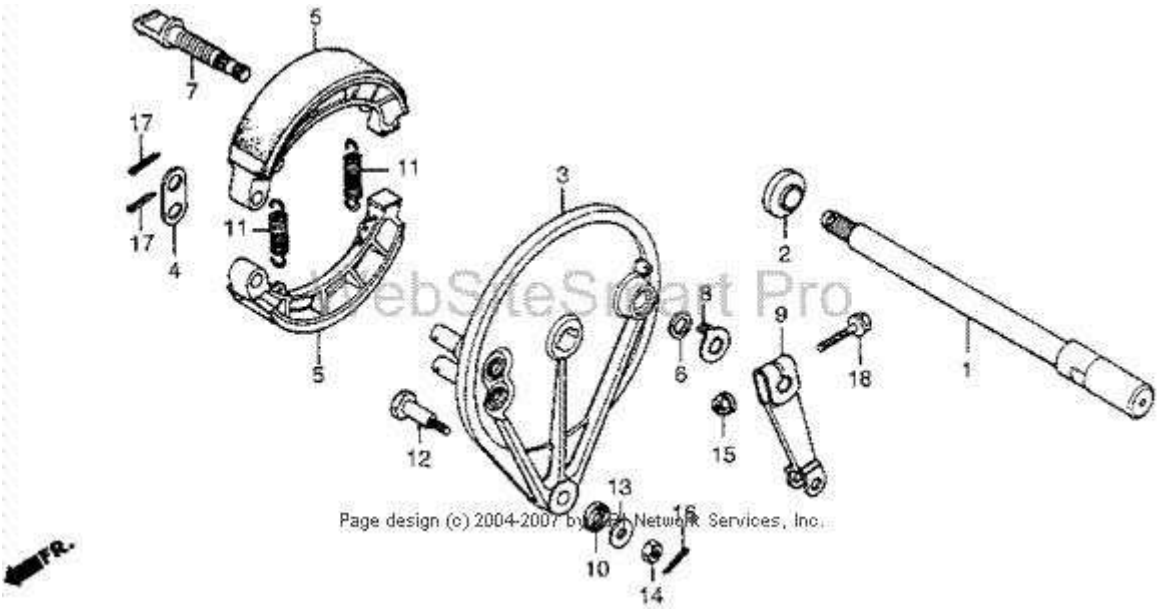

Tag	Description	Req	Price	
001	Axle, Rr. Wheel(Not Available)	1	$34.12	Add
002	Collar, Rr. Brake Panel Side(Not Available)	1	$6.37	Add

003	Panel, Rr. Brake(Not Available)	1	$117.69	Add
004	Washer, Anchor Pin	1	$3.50	Add
004	Washer, Brake Anchor Pin	1	$3.50	Add
005	Shoe, Rr. Brake(See Kit P/N--End of Block)	2	$21.98	Add
005	Shoe, Brake	2	$21.98	Add
006	Dust Seal, Brake Cam	1	$1.95	Add
007	Cam, Rr. Brake	1	$20.55	Add
008	Indicator, Rr. Brake(Not Available)	1	$2.92	Add
009	Arm, Rr. Brake(Not Available)	1	$11.88	Add
010	Rubber, Stopper Arm Cushion	1	$1.95	Add
011	Spring, Fr. Brake Shoe	2	$1.95	Add
012	Bolt, Rr. Brake Stopper	1	$2.70	Add
013	Washer a, Handle Holder Setting	1	$1.95	Add
014	Nut, Hex. (8mm)	1	$1.95	Add
015	Nut, Flange (8mm)	1	$1.95	Add
016	Pin, Cotter (2.0x22)	1	$1.95	Add
016	Pin, Cotter (2.0x35)	1	$1.95	Add
017	Pin, Cotter (2.5mm)	2	$1.95	Add
018	Bolt, Flange (8x40)	1	$1.95	Add
018	Bolt, Flange (8x40)	1	$1.95	Add

F13

BABBITT'S ONLINE

ALL BRANDS HONDA SUZUKI KAWASAKI SEA-DOO POLARIS ARCTIC CAT CAN-AM

BABBITT'S ONLINE.COM

» View Cart » Checkout » Email: Parts | Sales » (231) 737-4542 »

OEM Parts | Accessories | Apparel | Aftermarket Parts | Contact Us | About Us | Boo

» Babbitt's Online Home
» Buy OEM Parts Online
» Buy Accessories Online
» New Vehicles
» Preowned Vehicles
» Company Info
» Maps / Hours
» Specials
» Financing
» View Cart
» Checkout

Search:
[Find Accessory] GO
enter sku or name and click "GO"

» OEM PARTS

<<-- Pick New Model

Change Assembly: Rear Wheel

ZOOM IN ZOOM OUT

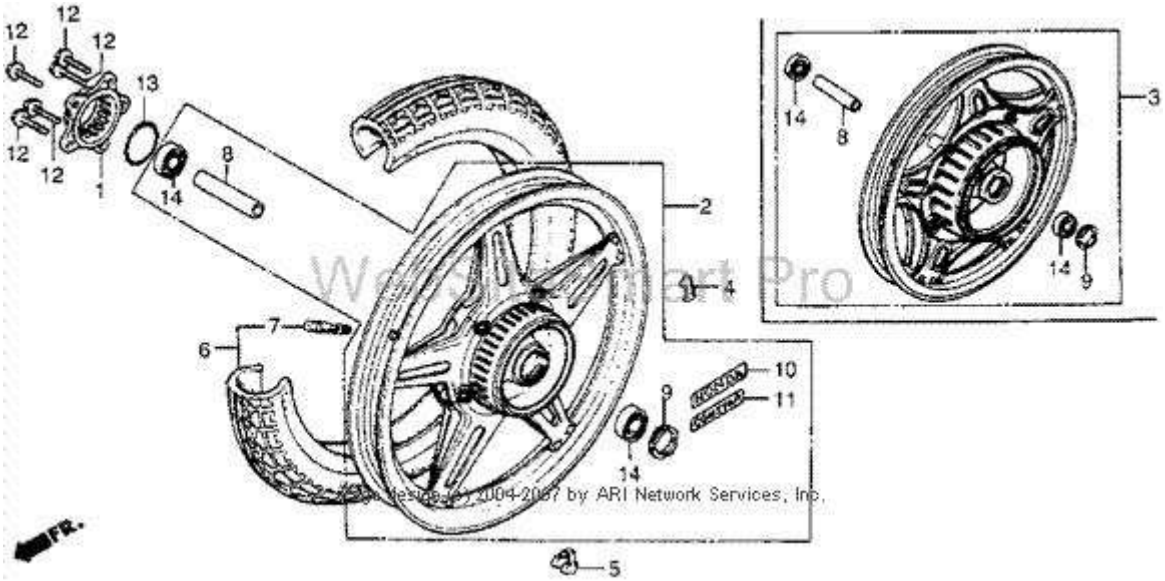

Tag	Description	Req	Price	
001	Flange, Final Driven(Not Available)	1	$90.11	Add
003	Wheel, Rr	1	$328.89	Add

004	Mark, Rr. Spoke Plate(Not Available)	10	$6.43	Add
005	Weight, Balance (20g)	1	$6.88	Add
005	Weight, Balance (30g)	1	$6.88	Add
006	Tire Assy., Rr. (3.75s-18) (Yokohama)(Not Available)	1	$43.48	Add
006	Tire Assy., Rr. (3.75s-18) (Bs)(Not Available)	1	$43.48	Add
007	Valve, Rim (Taiheiyo)	1	$1.95	Add
007	Valve, Rim (Schrader)	1	$1.95	Add
008	Collar, Fr. Wheel Distance	1	$8.48	Add
009	Retainer, Fr. Wheel Bearing	1	$7.65	Add
012	Bolt, Sprocket	5	$3.14	Add
013	O-Ring (54x2.4) (Arai)	1	$2.26	Add
014	Bearing, Radial Ball (6302uu)	2	$8.25	Add

Babbitts Sports Center
3712 Airline Rd.
Muskegon MI 49444
Phone: 231-737-4542

Terms And Conditions | Privacy Policy
Powered by ARI Network Services - WebsiteSmart Pro

F14

BABBITT'S ONLINE

ALL BRANDS HONDA SUZUKI KAWASAKI SEA-DOO POLARIS ARCTIC CAT CAN-AM

BABBITT'S ONLINE.COM

» View Cart » Checkout » Email: Parts | Sales » (231) 737-4542 »

OEM Parts | Accessories | Apparel | Aftermarket Parts | Contact Us | About Us | Boo

» Babbitt's Online Home
» Buy OEM Parts Online
» Buy Accessories Online
» New Vehicles
» Preowned Vehicles
» Company Info
» Maps / Hours
» Specials
» Financing
» View Cart
» Checkout

Search:
[Find Accessory] GO
enter sku or name and click "GO"

» OEM PARTS

<<-- Pick New Model

Change Assembly: Final Driver Gear

ZOOM IN ZOOM OUT

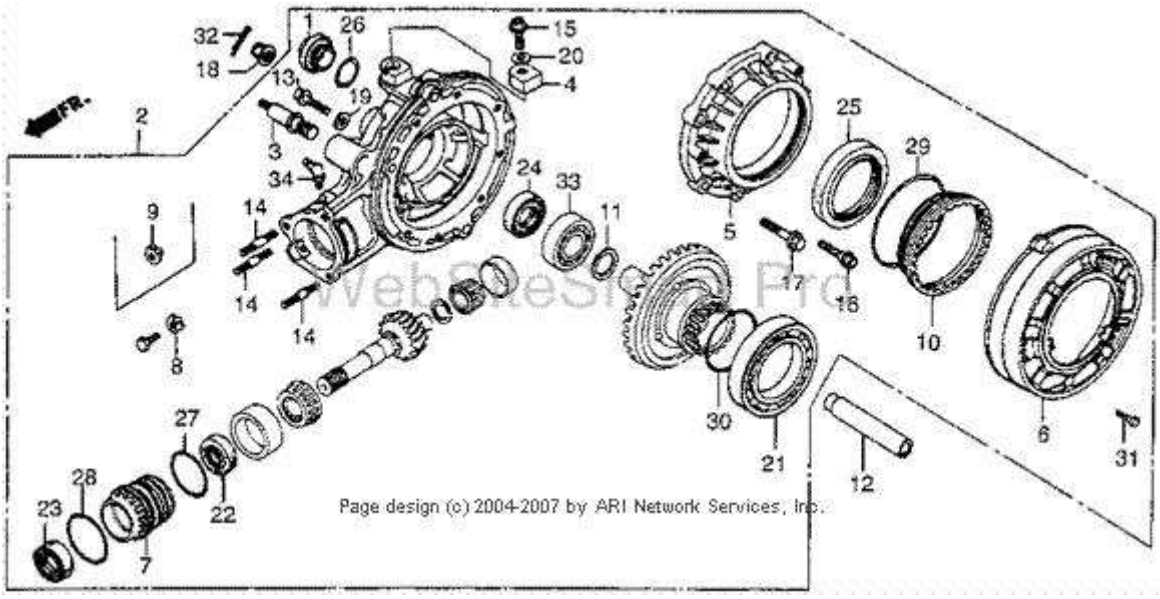

Tag	Description	Req	Price	
001	Cap, Valve Adj	1	$6.74	Add
002	Gear Assy., Final Driven	1	$965.89	Add

003	Stay, Rr. Rubber (Lower)(Not Available)	1	$7.88	Add
004	Cap, Breather	1	$3.02	Add
005	Cover, L. Case	1	$108.80	Add
006	Plate, Dust Guard(Not Available)	1	$15.07	Add
007	Retainer B, Bearing(Not Available)	1	$73.74	Add
008	Lock a, Bearing Adj	1	$1.95	Add
009	Lock B, Bearing Adj	1	$1.95	Add
010	Retainer a, Bearing	1	$56.68	Add
011	Shim a, Ring Gear (1.80)(Not Available)	1	$4.80	Add
011	Shim B, Ring Gear (1.84)(Not Available)	1	$4.80	Add
011	Shim C, Ring Gear (1.88)	1	$5.58	Add
011	Shim D, Ring Gear (1.92)(Not Available)	1	$4.80	Add
011	Shim E, Ring Gear (1.96)(Not Available)	1	$4.80	Add
011	Shim F, Ring Gear (2.00)(Not Available)	1	$4.80	Add
011	Shim G, Ring Gear (2.04)	1	$5.58	Add
011	Shim H, Ring Gear (2.08)(Not Available)	1	$4.80	Add
011	Shim I, Ring Gear (2.12)	1	$5.58	Add
011	Shim J, Ring Gear (2.16)(Not Available)	1	$4.80	Add
011	Shim K, Ring Gear (2.20)(Not Available)	1	$4.80	Add
011	Shim L, Ring Gear (2.24)	1	$5.58	Add
011	Shim M, Ring Gear (2.28)(Not Available)	1	$4.80	Add
011	Shim N, Ring Gear (2.32)(Not Available)	1	$4.80	Add
012	Collar, Rr. Axle Distance(Not Available)	1	$13.37	Add
013	Bolt, Sealing (8mm)	1	$1.95	Add
014	Bolt, Stud (10x45)(Not Available)	3	$2.33	Add
015	Bolt, Breather(Not Available)	1	$3.91	Add
016	Bolt, Flange (8x32)	6	$4.28	Add
017	Bolt, Flange (10x38)(Not Available)	2	$4.26	Add
018	Nut, Axle (14mm)	1	$4.57	Add
019	Washer (8mm)	1	$1.95	Add
020	Washer, Oil Bolt	1	$1.95	Add
021	Bearing (6914) (Koyo Seiko)	1	$53.34	Add
022	Oil Seal (25x40x8)	1	$4.96	Add
023	Oil Seal (33x43x7)(Not Available)	1	$5.60	Add
024	Oil Seal (30x47x7)	1	$6.52	Add
025	Oil Seal (70x90x8)	1	$8.55	Add
026	O-Ring (30.8mm)	1	$2.46	Add
027	O-Ring (49.6x3.5)(Not Available)	1	$2.58	Add
028	O-Ring (53.6x2.4)(Not Available)	1	$2.14	Add
029	O-Ring (96.5x2.0)	1	$4.86	Add
030	O-Ring (62.7x4)(Not Available)	1	$3.10	Add
031	Bolt, Hex. (6x10)	4	$1.95	Add
032	Pin, Cotter (3.0x45)	1	$1.95	Add

033	Bearing, Radial Ball (6006)	1	$8.25	Add
034	Fitting, Grease (B.76s)	1	$1.95	Add

F15

» OEM PARTS

<<-- Pick New Model

Change Assembly: Fuel Tank I

ZOOM IN ZOOM OUT

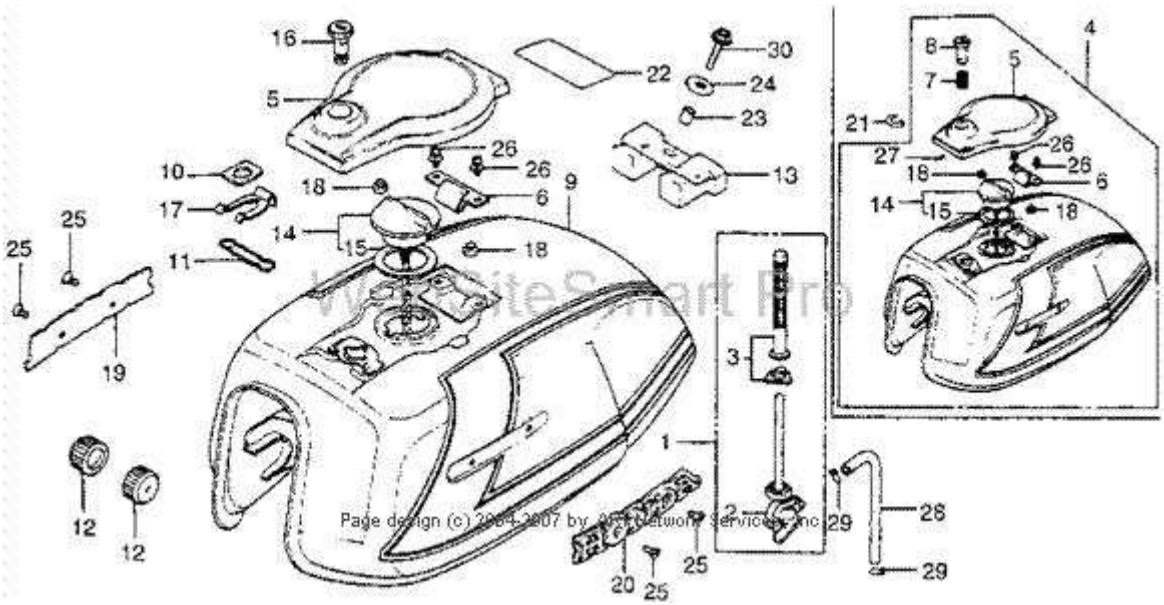

Tag	Description	Req	Price	
001	Petcock Assy	1	$33.53	Add
002	Body, Petcock(Not Available)	1	$22.18	Add

002	Body, Petcock(Not Available)	1	$22.18	Add
002	Body, Petcock(Not Available)	1	$22.18	Add
003	Screen Set, Fuel Strainer	1	$19.23	Add
004	Tank Assy., Fuel *Nh1*(Black)(Not Available)	1	$494.72	Add
004	Tank Assy., Fuel *R8cs*(Candy Presto Red)	1	$338.70	Add
005	Lid, Fuel Tank *Nh105*(Mat Black)(Not Available)	1	$37.34	Add
006	Spring a, Fuel Tank Lid(Not Available)	1	$4.71	Add
007	Spring B, Fuel Tank Lid(Not Available)	1	$1.95	Add
008	Pin, Fuel Tank Lid(Not Available)	1	$3.84	Add
012	Rubber, Fr. Fuel Tank	2	$2.34	Add
012	Rubber, Fr. Fuel Tank	2	$2.34	Add
013	Rubber, Rr. Fuel Tank	1	$8.60	Add
014	Cap, Fuel Tank	1	$27.98	Add
015	Gasket, Fuel Filler Cap	1	$1.95	Add
018	Plug, Chain Guard	2	$1.95	Add
019	Emblem, R. Fuel Tank	1	$24.67	Add
020	Emblem, L. Fuel Tank	1	$22.26	Add
021	Mark, Fuel Tank Lid(Not Available)	1	$1.95	Add
022	Mark, Drive Caution (Typeb)	1	$1.99	Add
022	Mark, Drive Caution (Typew)	1	$1.99	Add
023	Collar (8mm)	1	$2.33	Add
024	Washer (8.3mm)	1	$1.95	Add
025	Screw, Oval (4x6)	4	$1.95	Add
026	Screw-Washer (5x6)(Not Available)	2	$1.95	Add
027	Pin, Spring (2x18)(Not Available)	1	$1.95	Add
028	Bulk Hose, Fuel (5.5x8000)Oem Cut Size: (5.5x140)	1	$34.57	Add
029	Clip, Tube (B10)	2	$1.95	Add
030	Bolt, Flange (8x28)	1	$1.95	Add

F1501

BABBITT'S ONLINE

ALL BRANDS | HONDA | SUZUKI | KAWASAKI | SEA-DOO | POLARIS | ARCTIC CAT | CAN-AM | HELMETS

BABBITT'S ONLINE.COM

» View Cart » Checkout » Email: Orders | Sales » (231) 737-4542 »

OEM Parts | Accessories | Apparel | Aftermarket Parts | Contact Us | About Us | Bookmark

» Babbitt's Online Home
» Buy OEM Parts Online
» Buy Accessories Online
» New Vehicles
» Preowned Vehicles
» Company Info
» Maps / Hours
» Specials
» Financing
» View Cart
» Checkout

Search:
[Find Accessory] GO
enter sku or name and click "GO"

» OEM PARTS

<<-- Pick New Model

Change Assembly: Fuel Tank Ii

ZOOM IN ZOOM OUT ZOOM RESET

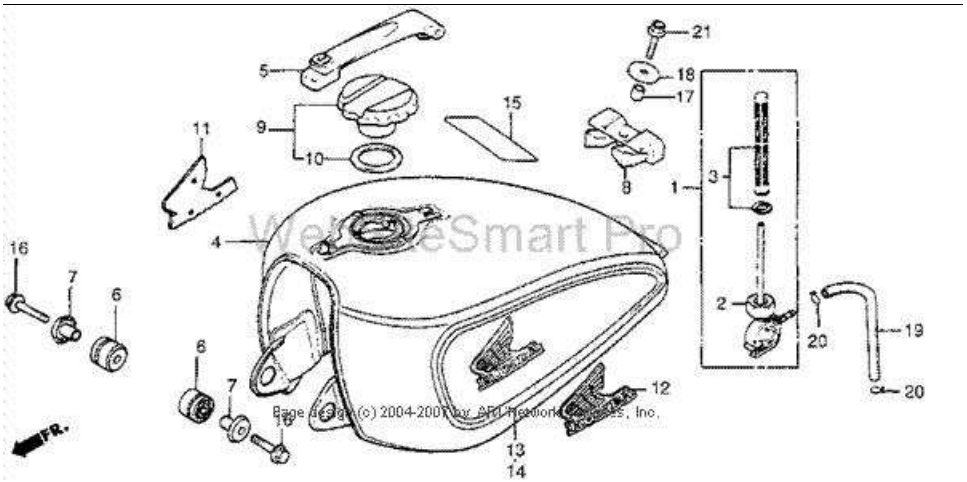

Tag	Description	Req	Price	
001	Petcock Assy	1	$33.53 ea	Add to Cart
002	Body, Petcock(Not Available)	1	$22.18 ea	Add to Cart
002	Body, Petcock(Not Available)	1	$22.18 ea	Add to Cart
003	Screen Set, Fuel Strainer	1	$19.23 ea	Add to Cart
004	Tank Sub-Assy., Fuel *R106cu*(Candy Plum Red)(Not Available)	1	$290.17 ea	Add to Cart
004	Tank Sub-Assy., Fuel *Nh1*(Black)(Not Available)	1	$348.86 ea	Add to Cart
004	Tank Sub-Assy., Fuel *Pb110cu*(Candy Universal Blue)(Not Available)	1	$343.14 ea	Add to Cart
005	Lid, Fuel Tank(Not Available)	1	$50.10 ea	Add to Cart
006	Rubber, Fr. Tank	2	$3.20 ea	Add to Cart
007	Collar, Fr. Tank Setting	2	$11.71 ea	Add to Cart

008	Rubber, Rr. Fuel Tank(Not Available)	1	$10.53 ea	Add to Cart
009	Cap, Fuel Filler	1	$37.25 ea	Add to Cart
009	Cap, Fuel Filler	1	$37.25 ea	Add to Cart
010	Gasket, Fuel Filler Cap	1	$4.44 ea	Add to Cart
011	Emblem, R. Fuel Tank	1	$12.89 ea	Add to Cart
012	Emblem, L. Fuel Tank	1	$12.89 ea	Add to Cart
013	Stripe, R. Fuel Tank	1	$35.59 ea	Add to Cart
014	Stripe, Fuel Tank L	1	$35.93 ea	Add to Cart
015	Mark, Drive Caution (Typeb)	1	$1.99 ea	Add to Cart
015	Mark, Drive Caution (Typew)	1	$1.99 ea	Add to Cart
016	Bolt, Flange (8x36)	2	$2.68 ea	Add to Cart
017	Collar (8mm)	1	$2.33 ea	Add to Cart
018	Washer (8.3mm)	1	$1.95 ea	Add to Cart
019	Bulk Hose, Fuel (5.5x8000)Oem Cut Size: (5.5x200)	1	$34.57 ea	Add to Cart
020	Clip, Tube (B10)	2	$1.95 ea	Add to Cart
021	Bolt, Flange (8x28)	1	$1.95 ea	Add to Cart

F16

BABBITT'S ONLINE

ALL BRANDS HONDA SUZUKI KAWASAKI SEA-DOO POLARIS ARCTIC CAT CAN-AM

BABBITT'S ONLINE.COM

» View Cart » Checkout » Email: Parts | Sales » (231) 737-4542 »

OEM Parts | Accessories | Apparel | Aftermarket Parts | Contact Us | About Us | Boo

» Babbitt's Online Home
» Buy OEM Parts Online
» Buy Accessories Online
» New Vehicles
» Preowned Vehicles
» Company Info
» Maps / Hours
» Specials
» Financing
» View Cart
» Checkout

Search:
[Find Accessory] GO
enter sku or name and click "GO"

» OEM PARTS

<<-- Pick New Model

Change Assembly: Seat

ZOOM IN ZOOM OUT

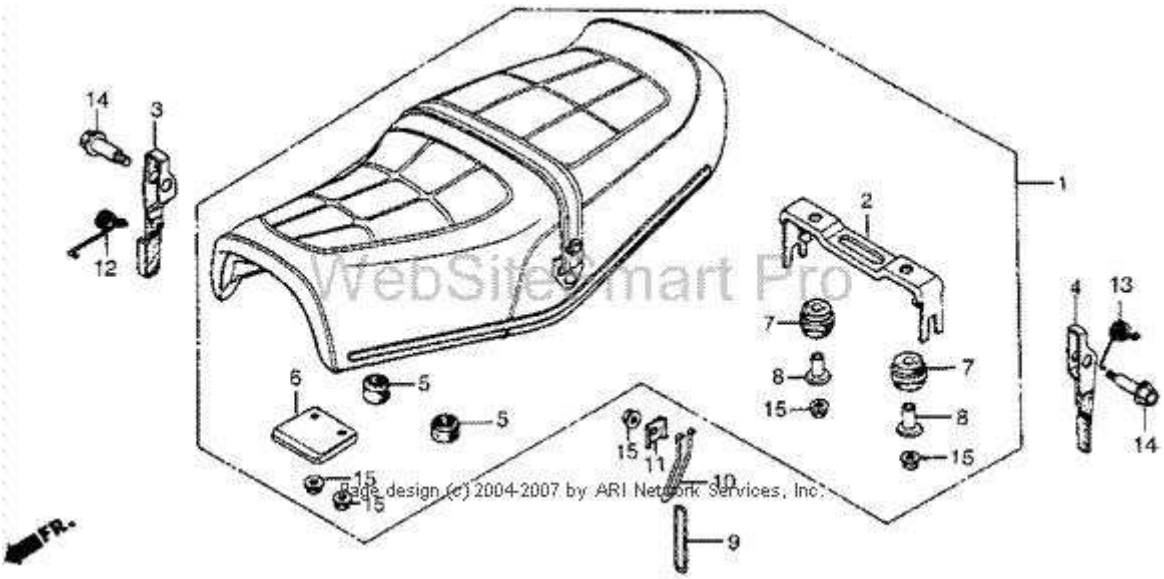

Tag	Description	Req	Price	
002	Plate, Seat Lock(Not Available)	1	$18.86	Add
003	Lever, R. Seat Lock(Not Available)	1	$7.36	Add

004	Lever, L. Seat Lock(Not Available)	1	$7.36	Add
005	Rubber B, Seat Setting	2	$3.93	Add
006	Stay, Fr. Seat(Not Available)	1	$3.45	Add
007	Rubber, Seat Mount(Not Available)	2	$1.95	Add
008	Collar, Seat Mount(Not Available)	2	$2.94	Add
009	Ring, Seat Lock(Not Available)	1	$3.66	Add
010	Arm, Seat Lock(Not Available)	1	$2.31	Add
011	Washer, Seat Lock(Not Available)	1	$1.95	Add
012	Spring, R. Seat Lock(Not Available)	1	$1.95	Add
013	Spring, L. Seat Lock(Not Available)	1	$1.95	Add
014	Bolt, Seat Lock	2	$4.10	Add
015	Nut, Flange (6mm)	5	$1.95	Add

Babbitts Sports Center
3712 Airline Rd.
Muskegon MI 49444
Phone: 231-737-4542

Terms And Conditions | Privacy Policy
Powered by ARI Network Services - WebsiteSmart Pro

F17

BABBITT'S ONLINE

ALL BRANDS HONDA SUZUKI KAWASAKI SEA-DOO POLARIS ARCTIC CAT CAN-AM

BABBITT'S ONLINE.COM

» View Cart » Checkout » Email: Parts | Sales » (231) 737-4542 »

OEM Parts | Accessories | Apparel | Aftermarket Parts | Contact Us | About Us | Boo

» Babbitt's Online Home
» Buy OEM Parts Online
» Buy Accessories Online
» New Vehicles
» Preowned Vehicles
» Company Info
» Maps / Hours
» Specials
» Financing
» View Cart
» Checkout

Search:
[Find Accessory] GO
enter sku or name and click "GO"

» OEM PARTS

<<-- Pick New Model

Change Assembly: Side Cover @ Battery

ZOOM IN ZOOM OUT

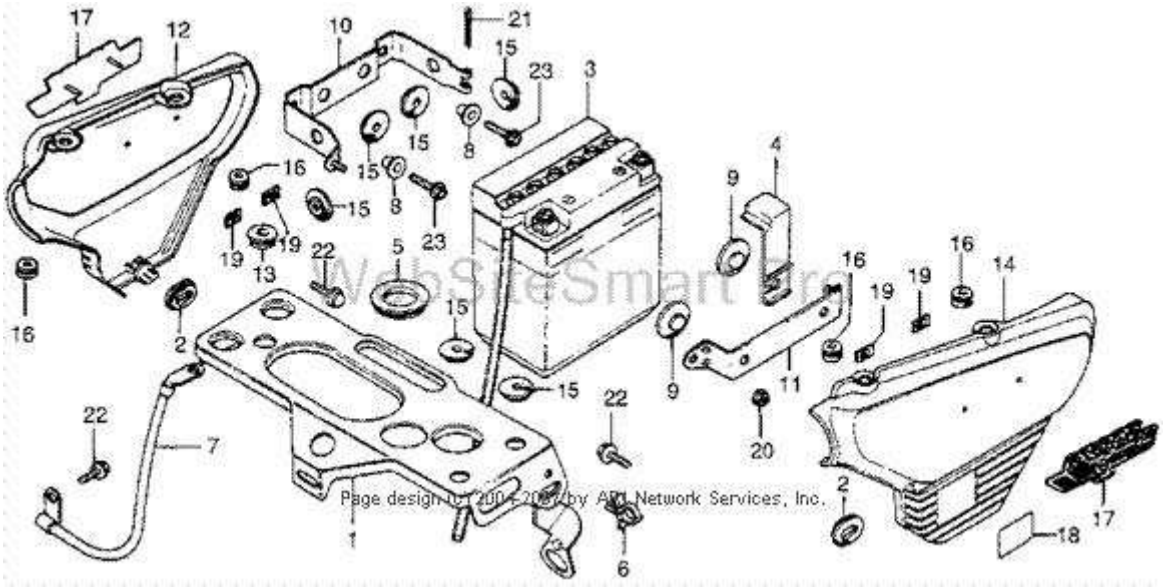

Tag	Description	Req	Price	
001	Plate, Air Cleaner Holder(Not Available)	1	$25.19	Add
002	Grommet a, Air Cleaner Housing	2	$4.50	Add

003	Battery Assy. (Yuasa)	1	$37.59	Add
003	Battery Assy	1	$37.59	Add
004	Cover, Battery(Not Available)	1	$3.86	Add
005	Grommet, Wire	1	$1.95	Add
006	Clip, Harness	1	$3.07	Add
007	Cable, Battery Ground	1	$13.15	Add
008	Collar, Chain Case(Not Available)	2	$1.95	Add
009	Rubber B, Battery	2	$2.31	Add
010	Band a, Battery	1	$20.94	Add
011	Band B, Battery(Not Available)	1	$9.16	Add
012	Cover, R. Side *Nh1*(Black)(Not Available)	1	$53.22	Add
012	Cover, R. Side *R8cs*(Candy Presto Red)	1	$61.82	Add
013	Grommet, Side Cover(Not Available)	1	$1.95	Add
014	Cover, L. Side *Nh1*(Black)(Not Available)	1	$63.98	Add
014	Cover, L. Side *R8cs*(Candy Presto Red)(Not Available)	1	$51.93	Add
015	Rubber, Battery Box	6	$1.95	Add
016	Grommet, Side Cover Setting	4	$2.10	Add
017	Emblem, Side Cover(Not Available)	2	$16.12	Add
018	Mark, Radiator Caution(Not Available)	1	$2.97	Add
019	Nut, Speed (3mm)	4	$1.95	Add
020	Nut, Flange (6mm)	1	$1.95	Add
021	Pin, Cotter (3.0x45)	1	$1.95	Add
022	Bolt, Flange (6x12)	3	$1.95	Add
022	Bolt, Flange (6x12)	3	$1.95	Add
023	Bolt, Flange (6x20)	2	$1.95	Add

F18

BABBITT'S ONLINE

ALL BRANDS HONDA SUZUKI KAWASAKI SEA-DOO POLARIS ARCTIC CAT CAN-AM

BABBITT'S ONLINE.COM

» View Cart » Checkout » Email: Parts | Sales » (231) 737-4542 »

OEM Parts | Accessories | Apparel | Aftermarket Parts | Contact Us | About Us | Boo

» Babbitt's Online Home
» Buy OEM Parts Online
» Buy Accessories Online
» New Vehicles
» Preowned Vehicles
» Company Info
» Maps / Hours
» Specials
» Financing
» View Cart
» Checkout

Search:
[Find Accessory] GO
enter sku or name and click "GO"

» OEM PARTS

<<-- Pick New Model

Change Assembly: Electric Plate @ C.D.I. Unit

ZOOM IN ZOOM OUT

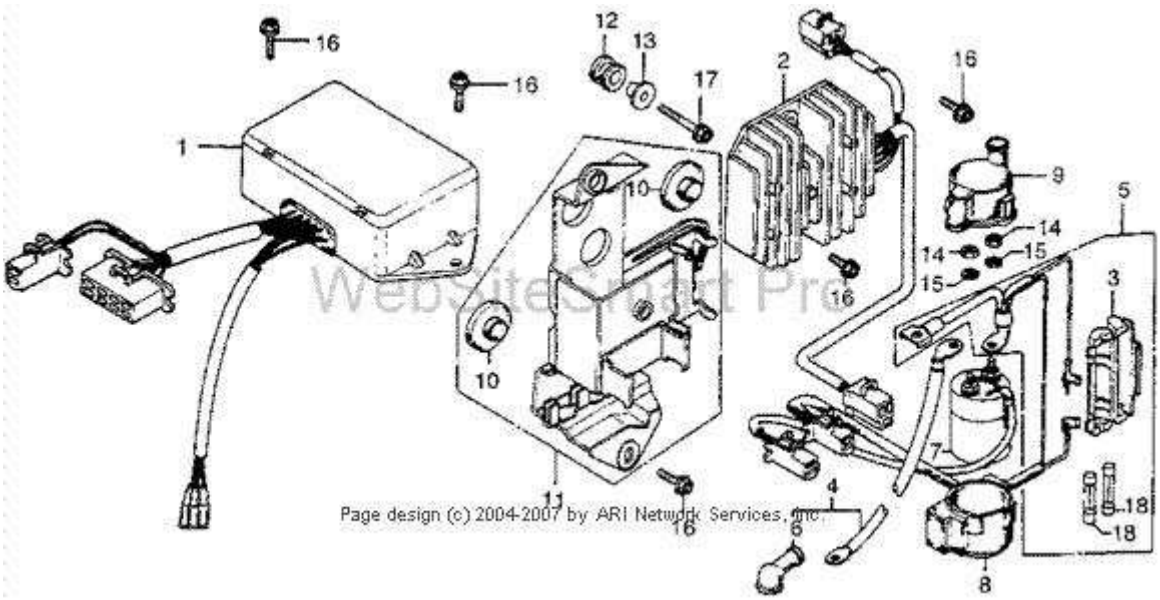

Tag	Description	Req	Price	
001	Module, Ignition Control (Cdi)(Hitachi)(Not Available)	1	$366.76	Add
002	Rectifier Assy., Regulator	1	$219.77	Add

003	Case, Fuse (20a)(Not Available)	1	$4.32	Add
004	Cable, Starter Motor(Not Available)	1	$21.30	Add
005	Cable, Starter Battery(Not Available)	1	$26.36	Add
006	Cover, Starter Motor Terminal	1	$4.48	Add
007	Switch Assy., Starter Magnetic	1	$53.78	Add
008	Rubber, Magnetic Shock	1	$4.93	Add
009	Cover, Magnetic Switch(Not Available)	1	$5.34	Add
010	Rubber B, Battery	2	$2.31	Add
011	Plate, Electric	1	$22.21	Add
012	Rubber, Fr. Fender Setting	1	$1.95	Add
013	Collar, Fr. Fender	1	$3.02	Add
013	Collar, Rr. Fender	1	$3.02	Add
014	Nut, Hex. (6mm)	2	$1.95	Add
015	Washer, Spring (6mm)	2	$1.95	Add
016	Bolt, Flange (6x14)	5	$1.95	Add
017	Bolt, Flange (6x25)	1	$1.95	Add
018	Fuse (20a)	2	$1.95	Add

F19

BABBITT'S ONLINE

ALL BRANDS HONDA SUZUKI KAWASAKI SEA-DOO POLARIS ARCTIC CAT CAN-AM

BABBITT'S ONLINE.COM

» View Cart » Checkout » Email: Parts | Sales » (231) 737-4542 »

OEM Parts | Accessories | Apparel | Aftermarket Parts | Contact Us | About Us | Boo

» Babbitt's Online Home
» Buy OEM Parts Online
» Buy Accessories Online
» New Vehicles
» Preowned Vehicles
» Company Info
» Maps / Hours
» Specials
» Financing
» View Cart
» Checkout

Search:
[Find Accessory] GO
enter sku or name and click "GO"

» OEM PARTS

<<-- Pick New Model

Change Assembly: Air Cleaner

ZOOM IN ZOOM OUT

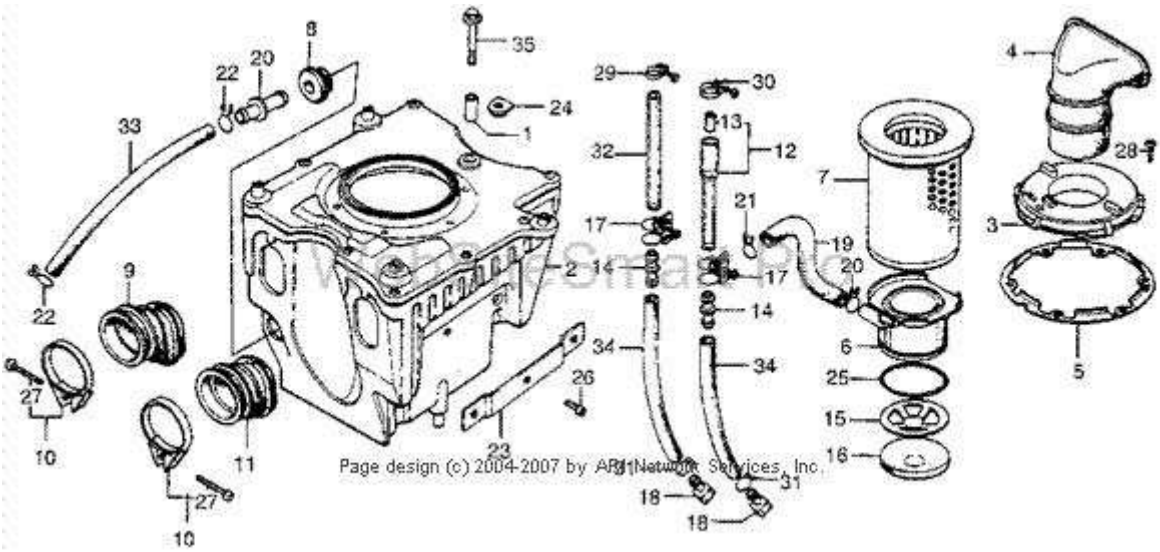

Tag	Description	Req	Price	
001	Collar, Air Cleaner Bracket(Not Available)	1	$1.95	Add
002	Housing, Air Cleaner(Not Available)	1	$98.12	Add

003	Cap, Air Cleaner Element	1	$12.36	Add
004	Tube, Air Cleaner Duct(Not Available)	1	$12.64	Add
005	Holder, Cap	1	$12.36	Add
006	Holder, Element(Not Available)	1	$11.13	Add
007	Element, Air Cleaner	1	$26.60	Add
008	Grommet, Tube	1	$1.95	Add
009	Tube, R. Air Cleaner Connecting(Not Available)	1	$14.82	Add
010	Band Assy., Air Cleaner Connecting Tube	2	$4.83	Add
011	Tube, L. Air Cleaner Connecting(Not Available)	1	$13.25	Add
012	Tube, Breather(Not Available)	1	$5.87	Add
013	Filter(Not Available)	1	$1.95	Add
014	Joint, Breather Tube	2	$1.95	Add
015	Separator a(Not Available)	1	$2.85	Add
016	Element, Separator(Not Available)	1	$2.66	Add
017	Clip, Tube (A13.5)	2	$3.36	Add
018	Plug, Breather Tube	2	$2.04	Add
019	Tube, Breather(Not Available)	1	$3.43	Add
020	Joint, Breather Tube(Not Available)	1	$1.95	Add
021	Clip, Sub-Tank Hose	2	$1.95	Add
022	Clip, Air Hose (16)	2	$2.13	Add
023	Plate, Battery Band Support	1	$5.60	Add
024	Patch, Rr. Cowl	1	$1.99	Add
025	O-Ring (63.5x2)	1	$2.38	Add
026	Screw, Pan (4x8)	1	$1.95	Add
027	Screw, Pan (4x20)	2	$1.95	Add
028	Screw, Tapping (4x8)	6	$1.95	Add
029	Clip, Tube (A12)	1	$1.95	Add
030	Clip, Tube (A15)(Not Available)	1	$1.95	Add
031	Clip, Tube (B12.5)	2	$1.95	Add
032	Bulk Hose, Vinyl (8x12x8000)Oem Cut Size: (8x12x120)	1	$26.10	Add
033	Bulk Hose, Vacuum (12x1000)Oem Cut Size: (12x300)	1	$13.18	Add
034	Bulk Hose, Vacuum (8x1000)Oem Cut Size: (8x160)	2	$10.50	Add
035	Bolt, Flange (6x35)	1	$1.95	Add

F20

BABBITT'S ONLINE

ALL BRANDS HONDA SUZUKI KAWASAKI SEA-DOO POLARIS ARCTIC CAT CAN-AM

BABBITT'S ONLINE.COM

» View Cart » Checkout » Email: Parts | Sales » (231) 737-4542 »

OEM Parts | Accessories | Apparel | Aftermarket Parts | Contact Us | About Us | Boo

» Babbitt's Online Home
» Buy OEM Parts Online
» Buy Accessories Online
» New Vehicles
» Preowned Vehicles
» Company Info
» Maps / Hours
» Specials
» Financing
» View Cart
» Checkout

Search:
[Find Accessory] GO
enter sku or name and click "GO"

» OEM PARTS

<<-- Pick New Model

Change Assembly: Muffler

ZOOM IN ZOOM OUT

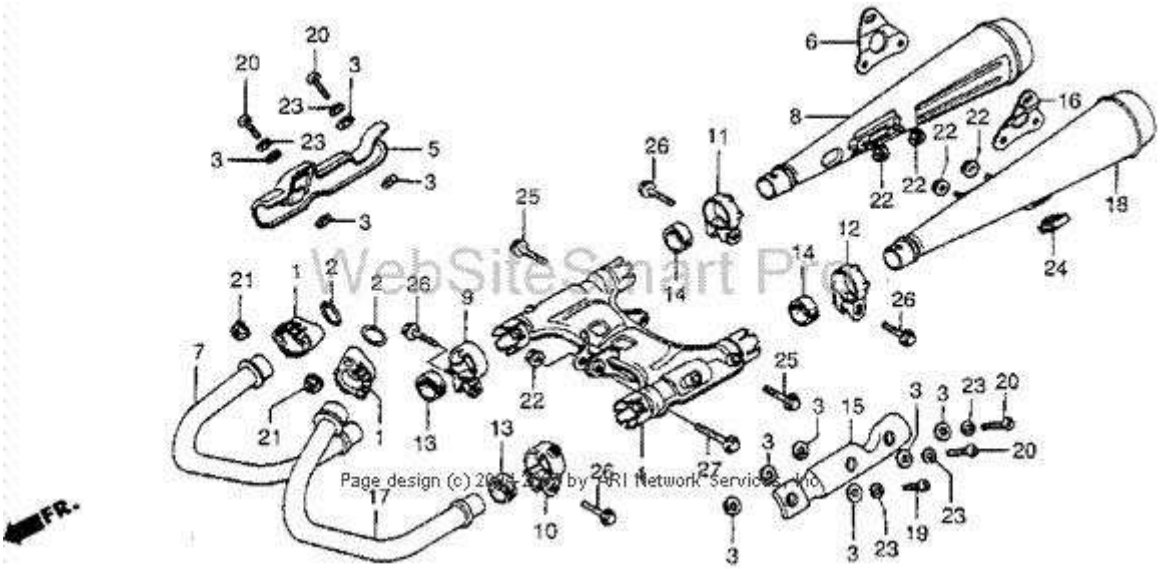

Tag	Description	Req	Price	
001	Joint, Ex. Pipe	2	$26.12	Add
002	Gasket, Ex. Pipe	2	$3.61	Add

002	Gasket, Ex. Pipe	2	$3.61	Add
003	Gasket, Protector	10	$1.95	Add
003	Gasket, Protector	10	$1.95	Add
003	Gasket, Protector	10	$1.95	Add
004	Pre Chamber(Not Available)	1	$185.46	Add
005	Protector, R. Chamber	1	$43.10	Add
006	Stay, R. Muffler	1	$11.02	Add
008	Muffler, R.(Not Available)	1	$131.86	Add
009	Band, R. Fr. Muffler(Not Available)	1	$16.96	Add
010	Band, L. Fr. Muffler	1	$19.70	Add
011	Band, R. Rr. Muffler	1	$19.70	Add
012	Band, L. Rr. Muffler	1	$19.70	Add
013	Gasket, Muffler	2	$7.36	Add
013	Gasket, Muffler	2	$7.36	Add
013	Gasket, Muffler	2	$7.36	Add
014	Gasket, Rr. Muffler	2	$7.36	Add
014	Gasket, Rr. Muffler	2	$7.36	Add
015	Protector, L. Chamber(Not Available)	1	$37.10	Add
016	Stay, L. Muffler(Not Available)	1	$9.50	Add
018	Muffler, L.(Not Available)	1	$126.18	Add
019	Screw, Pan (6x10)	1	$1.95	Add
020	Screw, Pan (6x14)	4	$1.95	Add
020	Screw, Pan (6x14)	4	$1.95	Add
021	Nut, Flange (6mm)	4	$1.95	Add
022	Nut, Flange (8mm)	5	$1.95	Add
023	Washer, Plain (6mm)	5	$1.95	Add
024	Rubber D, Stand Stopper	1	$2.11	Add
025	Bolt, Flange (8x16)	2	$1.95	Add
026	Bolt, Flange (8x35)	4	$1.95	Add
027	Bolt, Flange (8x40)	1	$1.95	Add

F21

BABBITT'S ONLINE

ALL BRANDS HONDA SUZUKI KAWASAKI SEA-DOO POLARIS ARCTIC CAT CAN-AM

BABBITT'S ONLINE.COM

» View Cart » Checkout » Email: Parts | Sales » (231) 737-4542 »

OEM Parts | Accessories | Apparel | Aftermarket Parts | Contact Us | About Us | Boo

» Babbitt's Online Home
» Buy OEM Parts Online
» Buy Accessories Online
» New Vehicles
» Preowned Vehicles
» Company Info
» Maps / Hours
» Specials
» Financing
» View Cart
» Checkout

Search:
[Find Accessory] GO
enter sku or name and click "GO"

» OEM PARTS

<<-- Pick New Model

Change Assembly: Brake Pedal @ Change Pedal

ZOOM IN ZOOM OUT

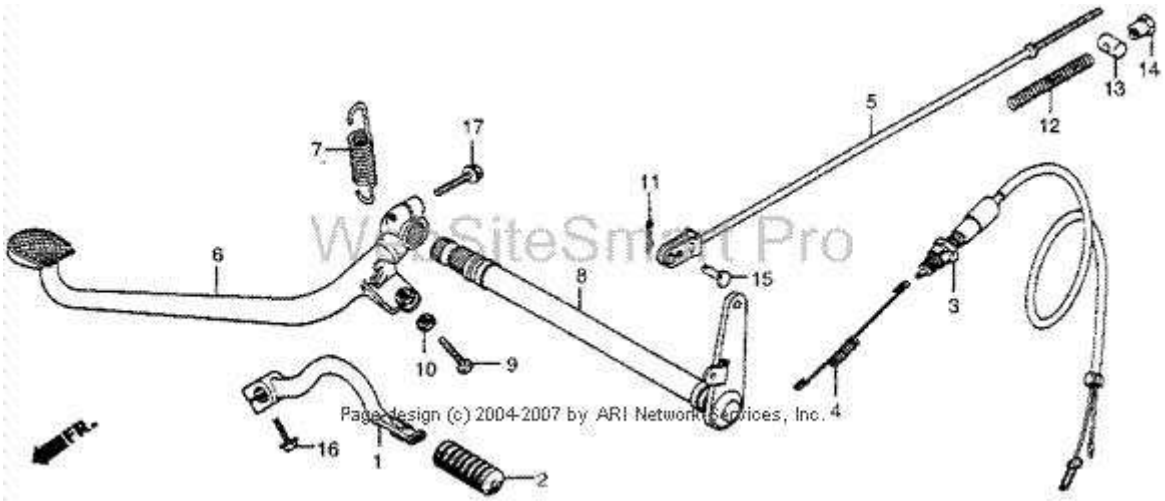

Tag	Description	Req	Price	
001	Pedal, Gearshift	1	$28.32	Add
002	Rubber, Gearshift Pedal	1	$2.97	Add

003	Switch Assy., Rr. Stop	1	$8.04	Add
004	Spring, Stop Switch(Not Available)	1	$2.85	Add
005	Rod, Rr. Brake	1	$9.19	Add
006	Pedal, Rr. Brake(Not Available)	1	$57.85	Add
007	Spring, Brake Pedal	1	$5.22	Add
007	Spring, Rr. Brake	1	$4.48	Add
008	Shaft, Rr. Brake Pivot(Not Available)	1	$43.55	Add
009	Bolt, Hex. (6x35)	1	$1.95	Add
010	Nut, Hex. (6mm)	1	$1.95	Add
010	Nut, Hex. (6mm)	1	$1.95	Add
011	Pin, Cotter (1.6x12)	1	$1.95	Add
012	Spring a, Brake Rod	1	$1.95	Add
013	Joint, Brake Arm	1	$1.95	Add
014	Nut B, Brake Rod Adjusting	1	$1.95	Add
015	Pin B, Brake Rod Joint	1	$1.95	Add
016	Bolt, Flange (6x20)	1	$1.95	Add
017	Bolt, Flange (8x28)	1	$1.95	Add

F22

BABBITT'S ONLINE

ALL BRANDS HONDA SUZUKI KAWASAKI SEA-DOO POLARIS ARCTIC CAT CAN-AM

BABBITT'S ONLINE.COM

» View Cart » Checkout » Email: Parts | Sales » (231) 737-4542 »

OEM Parts | Accessories | Apparel | Aftermarket Parts | Contact Us | About Us | Boo

» Babbitt's Online Home
» Buy OEM Parts Online
» Buy Accessories Online
» New Vehicles
» Preowned Vehicles
» Company Info
» Maps / Hours
» Specials
» Financing
» View Cart
» Checkout

Search:
[Find Accessory] GO
enter sku or name and click "GO"

» OEM PARTS

<<-- Pick New Model

Change Assembly: Step

ZOOM IN ZOOM OUT

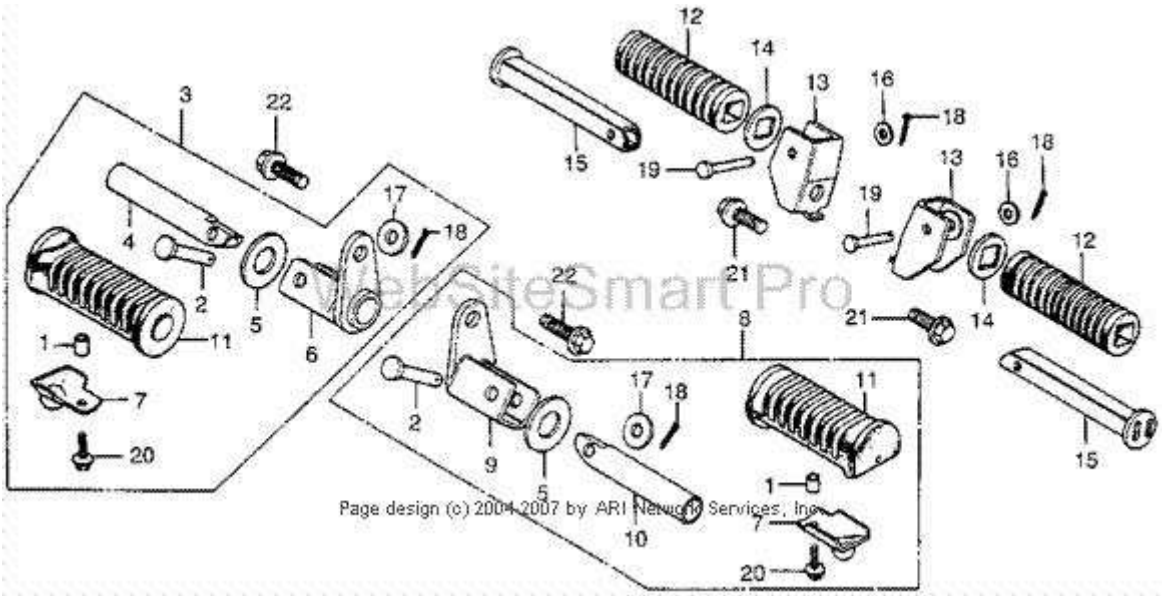

Tag	Description	Req	Price	
001	Collar, Instrument Setting	2	$2.97	Add
002	Pin, Step Bar Joint	2	$1.95	Add

003	Step Assy., R.(Not Available)	1	$41.22	Add
004	Bar, R. Footpeg	1	$11.65	Add
005	Washer, Main Footpeg	2	$1.95	Add
006	Arm, R. Step(Not Available)	1	$19.61	Add
007	Stopper, Step Rubber	2	$2.79	Add
008	Step Assy., L.(Not Available)	1	$36.87	Add
009	Arm, L. Step(Not Available)	1	$19.61	Add
010	Bar, L. Footpeg(Not Available)	1	$10.04	Add
011	Rubber, Footpeg	2	$6.74	Add
012	Rubber, Pillion Footpeg	2	$7.64	Add
013	Bracket, Pillion Footpeg	2	$35.98	Add
014	Washer, Pillion Footpeg	2	$1.95	Add
015	Bar, Pillion Footpeg	2	$15.71	Add
016	Washer, Plain (6mm)	2	$1.95	Add
017	Washer, Plain (8mm)	2	$1.95	Add
018	Pin, Cotter (1.6x25)	4	$1.95	Add
019	Pin B, Pillion Footpeg	2	$1.95	Add
020	Bolt, Flange (6x18)	2	$1.95	Add
021	Bolt, Flange (10x20)	2	$1.95	Add
022	Bolt, Flange (10x25)	2	$1.95	Add

F23

BABBITT'S ONLINE

ALL BRANDS HONDA SUZUKI KAWASAKI SEA-DOO POLARIS ARCTIC CAT CAN-AM

BABBITT'S ONLINE.COM

» View Cart » Checkout » Email: Parts | Sales » (231) 737-4542 »

OEM Parts | Accessories | Apparel | Aftermarket Parts | Contact Us | About Us | Boo

» Babbitt's Online Home
» Buy OEM Parts Online
» Buy Accessories Online
» New Vehicles
» Preowned Vehicles
» Company Info
» Maps / Hours
» Specials
» Financing
» View Cart
» Checkout

Search:
[Find Accessory] GO
enter sku or name and click "GO"

» OEM PARTS

<<-- Pick New Model

Change Assembly: Stand

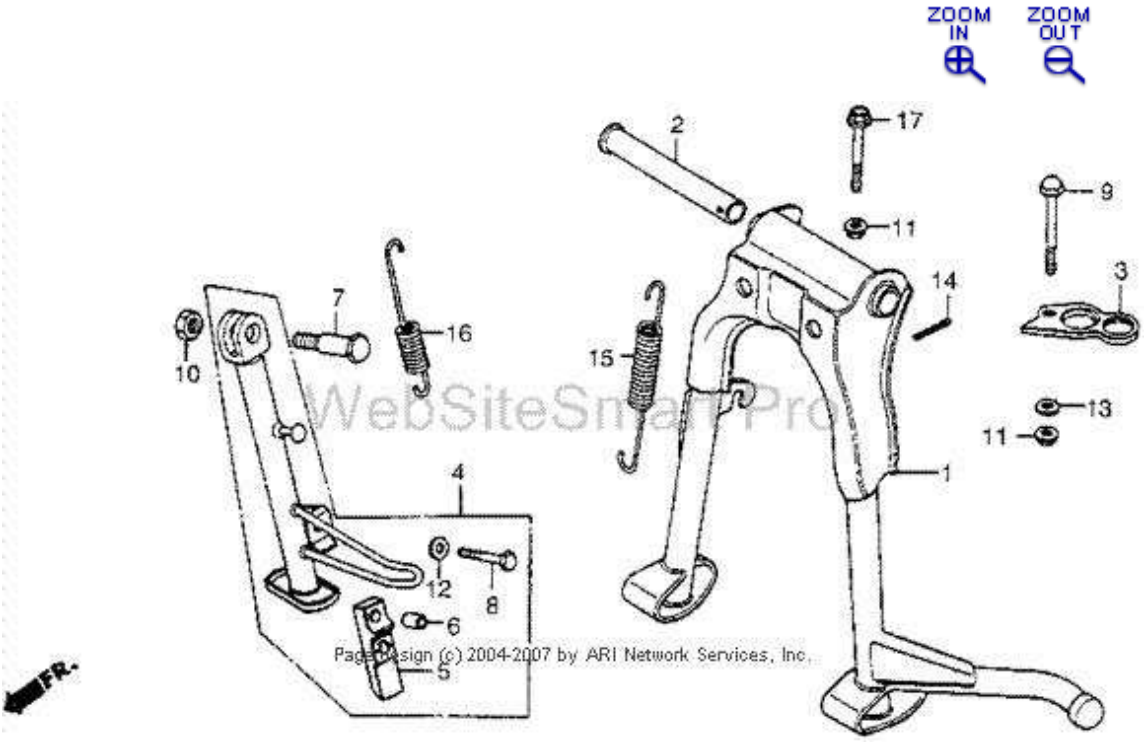

Tag	Description	Req	Price	
001	Stand, Main(Not Available)	1	$50.97	Add
002	Pipe, Main Stand Pivot	1	$10.56	Add

003	Clamp, Breather Tube(Not Available)	1	$2.56	Add
005	Bolt, Hex. (6x28)	1	$1.95	Add
006	Rubber, Stand	1	$5.62	Add
007	Collar, Stand Rubber Setting	1	$1.95	Add
008	Bolt, Side Stand Pivot	1	$2.86	Add
009	Bolt, Cap (6x40)(Not Available)	1	$1.95	Add
010	Nut, Hex. (10mm)	1	$1.95	Add
011	Nut, Flange (6mm)	2	$1.95	Add
012	Washer, Plain (6mm)	1	$1.95	Add
014	Pin, Cotter (2.5mm)	1	$1.95	Add
015	Spring J, Main Stand	1	$2.33	Add
016	Spring D, Side Stand	1	$1.95	Add
017	Bolt, Flange (6x40)	1	$1.95	Add

Babbitts Sports Center
3712 Airline Rd.
Muskegon MI 49444
Phone: 231-737-4542

F24

BABBITT'S ONLINE

ALL BRANDS HONDA SUZUKI KAWASAKI SEA-DOO POLARIS ARCTIC CAT CAN-AM

BABBITT'S ONLINE.COM

» View Cart » Checkout » Email: Parts | Sales » (231) 737-4542 »

OEM Parts | Accessories | Apparel | Aftermarket Parts | Contact Us | About Us | Boo

» Babbitt's Online Home
» Buy OEM Parts Online
» Buy Accessories Online
» New Vehicles
» Preowned Vehicles
» Company Info
» Maps / Hours
» Specials
» Financing
» View Cart
» Checkout

Search:
[Find Accessory] GO
enter sku or name and click "GO"

» OEM PARTS

<<-- Pick New Model

Change Assembly: Swingarm

ZOOM IN ZOOM OUT

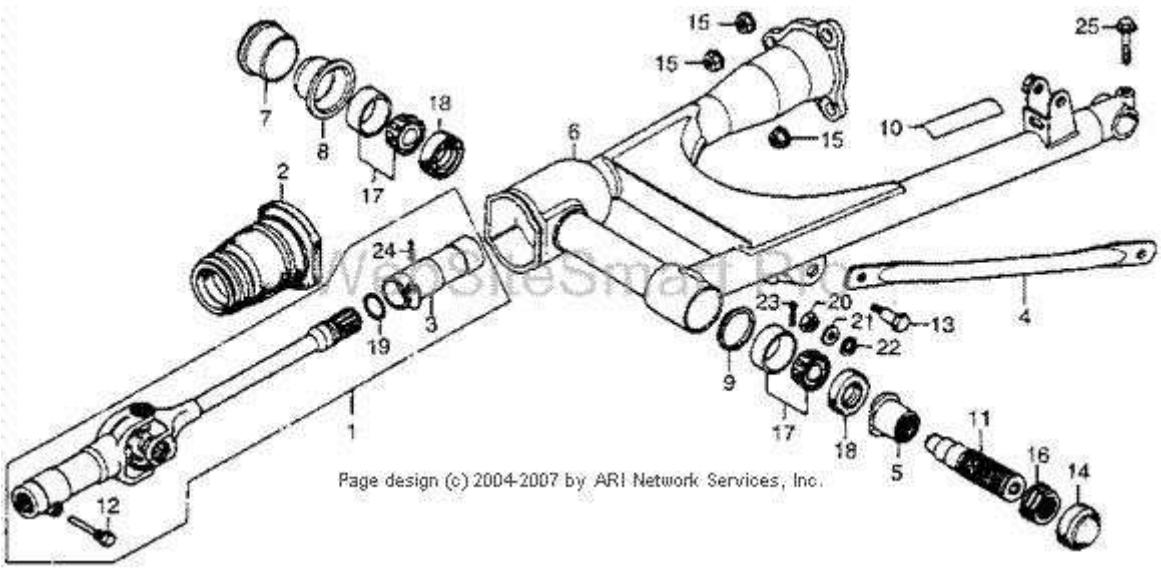

Tag	Description	Req	Price	
001	Shaft, Propeller	1	$201.62	Add
002	Boot, Joint(Not Available)	1	$22.17	Add

003	Joint, Driveshaft	1	$87.70	Add
004	Arm, Rr. Brake Stopper	1	$8.66	Add
005	Nut, Fork Pivot(Not Available)	1	$22.06	Add
006	Swingarm, Rr. *Nh1*(Black)(Not Available)	1	$186.94	Add
007	Cap, Rr. Swingarm Pivot(Not Available)	1	$2.94	Add
008	Holder, Rr. Swingarm Pivot Bearing(Not Available)	1	$16.00	Add
009	Plate, Dust Seal	1	$1.95	Add
010	Label, Muffler Caution	1	$1.95	Add
011	Bolt, Pivot(Not Available)	1	$21.44	Add
012	Bolt, Special (8mm)(Not Available)	1	$3.52	Add
013	Bolt, Rr. Brake Stopper Arm	1	$2.49	Add
014	Cap, Lock Nut	1	$3.96	Add
015	Nut, Hex. (10mm)	3	$2.70	Add
016	Nut, Lock (23mm)	1	$6.47	Add
017	Bearing (30202) (Nippon Seiko)	2	$23.30	Add
018	Oil Seal (20x35x7)	2	$3.50	Add
019	O-Ring (22x1.7)(Not Available)	1	$1.95	Add
020	Nut, Hex. (8mm)	1	$1.95	Add
021	Washer, Plain (8mm)	1	$1.95	Add
022	Washer, Spring (8mm)	1	$1.95	Add
023	Pin, Cotter (2.0x22)	1	$1.95	Add
023	Pin, Cotter (2.0x35)	1	$1.95	Add
024	Pin, Spring (4x22)	1	$1.95	Add
025	Bolt, Flange (8x32)	1	$1.95	Add

F25

BABBITT'S ONLINE

ALL BRANDS HONDA SUZUKI KAWASAKI SEA-DOO POLARIS ARCTIC CAT CAN-AM

BABBITT'S ONLINE.COM

» View Cart » Checkout » Email: Parts | Sales » (231) 737-4542 »

OEM Parts | Accessories | Apparel | Aftermarket Parts | Contact Us | About Us | Boo

» Babbitt's Online Home
» Buy OEM Parts Online
» Buy Accessories Online
» New Vehicles
» Preowned Vehicles
» Company Info
» Maps / Hours
» Specials
» Financing
» View Cart
» Checkout

Search:
[Find Accessory] GO
enter sku or name and click "GO"

» OEM PARTS

<<-- Pick New Model

Change Assembly: Rear Shock Absorber

ZOOM IN ZOOM OUT

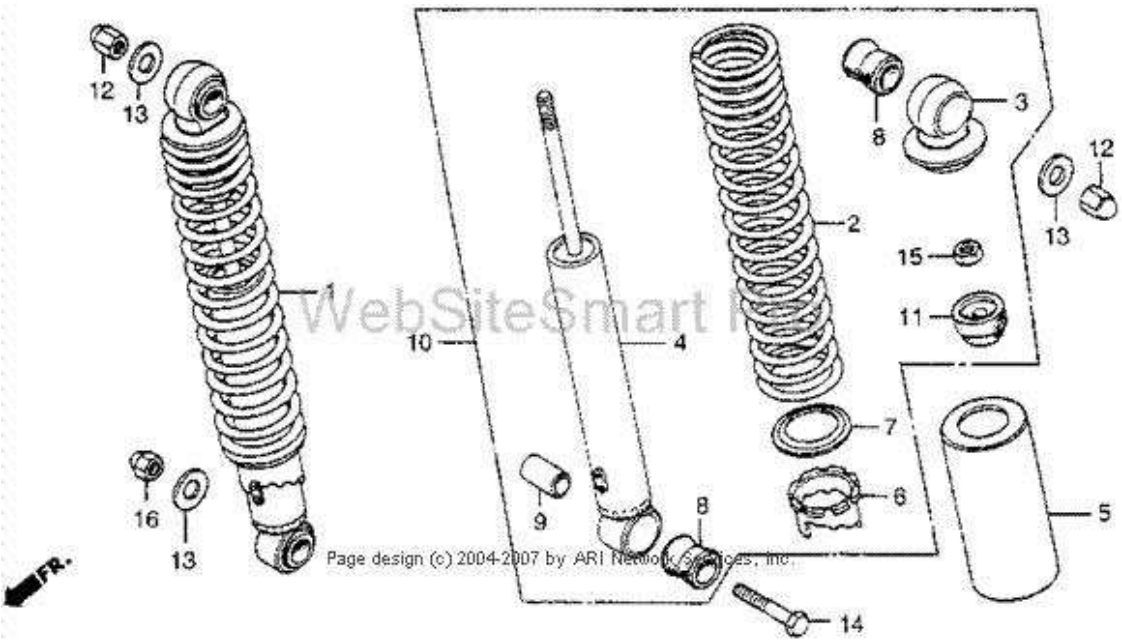

Tag	Description	Req	Price	
001	Shock Absorber Assy., R. Rr	1	$139.04	Add
002	Spring, Rr. Shock Absorber (Showa)	2	$41.90	Add

003	Joint (Upper)(Not Available)	2	$12.09	Add
004	Damper, Rr. (Showa)(Not Available)	2	$94.97	Add
006	Adjuster, Spring(Not Available)	2	$12.98	Add
007	Seat, Rr. Shock Absorber Spring (Lower)(Not Available)	2	$3.56	Add
008	Rubber, Joint	4	$2.98	Add
009	Collar, Rr. Shock Absorber (Showa)(Not Available)	1	$2.94	Add
011	Rubber, Stopper	2	$4.02	Add
012	Nut, Flange (10mm)	2	$2.86	Add
013	Washer (10.3mm)	3	$1.95	Add
014	Bolt, Hex. (10x40)	1	$1.95	Add
015	Nut, Hex. (10mm)	2	$1.95	Add
016	Nut, Cap (10mm)	1	$1.95	Add

Babbitts Sports Center
3712 Airline Rd.
Muskegon MI 49444
Phone: 231-737-4542

Terms And Conditions | Privacy Policy
Powered by ARI Network Services - WebsiteSmart Pro

F26

BABBITT'S ONLINE

ALL BRANDS HONDA SUZUKI KAWASAKI SEA-DOO POLARIS ARCTIC CAT CAN-AM

BABBITT'S ONLINE.COM

» View Cart » Checkout » Email: Parts | Sales » (231) 737-4542 »

OEM Parts | Accessories | Apparel | Aftermarket Parts | Contact Us | About Us | Boo

- Babbitt's Online Home
- Buy OEM Parts Online
- Buy Accessories Online
- New Vehicles
- Preowned Vehicles
- Company Info
- Maps / Hours
- Specials
- Financing
- View Cart
- Checkout

Search:
[Find Accessory] GO
enter sku or name and click "GO"

» OEM PARTS

<<-- Pick New Model

Change Assembly: Rear Fender I

ZOOM IN ZOOM OUT

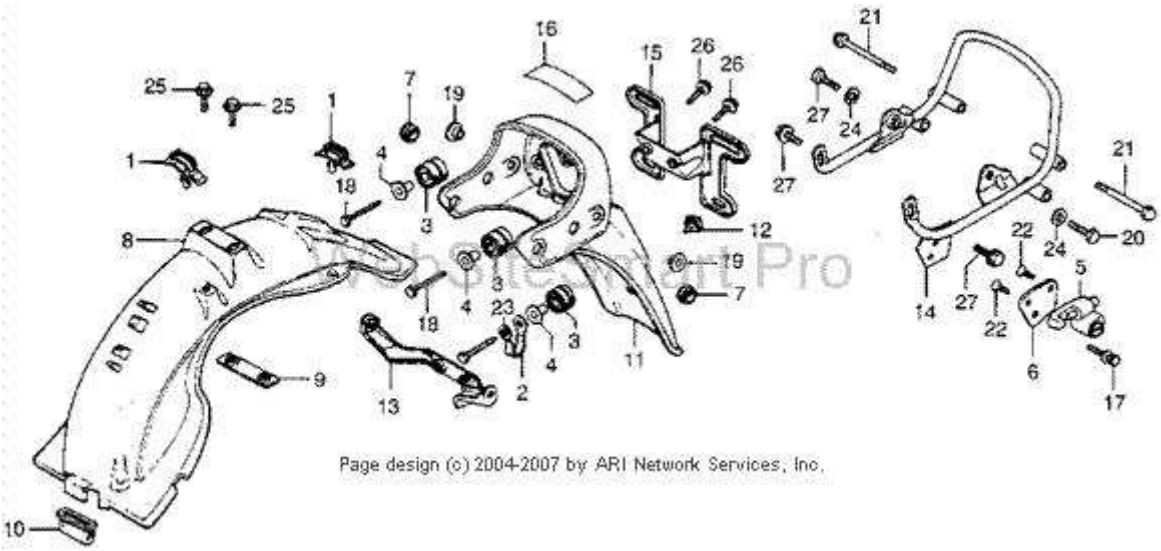

Tag	Description	Req	Price	
001	Clip, Wire Harness	2	$1.95	Add
002	Clamp, Wire(Not Available)	1	$2.82	Add

003	Rubber, Taillight Mount(Not Available)	3	$1.95	Add
004	Collar, Taillight Mount(Not Available)	3	$2.94	Add
005	Holder Assy., Helmet (Hondalock)	1	$32.26	Add
005	Holder Assy., Helmet	1	$32.26	Add
006	Plate, Helmet Holder(Not Available)	1	$5.08	Add
007	Grommet B, Meter Case	2	$2.24	Add
008	Fender, Rr.(Not Available)	1	$79.35	Add
009	Plate, Rr. Fender(Not Available)	1	$3.81	Add
010	Rubber, Fender Cushion(Not Available)	1	$2.94	Add
011	Cowl, Rr. *Nh1*(Black)(Not Available)	1	$119.45	Add
011	Cowl, Rr. *R8cs*(Candy Presto Red)	1	$138.72	Add
012	Plug, Rr. Cowl(Not Available)	1	$1.95	Add
013	Stay, Rr. Cowl	1	$30.42	Add
014	Bumper, Rr.(Not Available)	1	$64.87	Add
015	Bracket, Number Plate(Not Available)	1	$16.87	Add
016	Mark, Tire Caution(Not Available)	1	$4.06	Add
017	Bolt, Special (8x16mm)(Not Available)	1	$3.52	Add
018	Bolt, Taillight(Not Available)	3	$2.79	Add
019	Washer (6x20)	2	$1.95	Add
020	Bolt, Hex. (8x20)	2	$1.95	Add
021	Bolt, Cap (6x70)(Not Available)	2	$1.95	Add
023	Washer, Plain (6mm)	1	$1.95	Add
024	Washer, Plain (8mm)	2	$1.95	Add
025	Bolt, Flange (6x16)	2	$1.95	Add
026	Bolt, Flange (6x18)	2	$1.95	Add
026	Bolt, Flange (6x18)	2	$1.95	Add
027	Bolt, Flange (8x16)	2	$1.95	Add
027	Bolt, Flange (8x16)	2	$1.95	Add

F2601

BABBITT'S ONLINE

ALL BRANDS | HONDA | SUZUKI | KAWASAKI | SEA-DOO | POLARIS | ARCTIC CAT | CAN-AM | HELMETS

BABBITT'S ONLINE.COM

View Cart | Checkout | Email: Orders | Sales | (231) 737-4542

OEM Parts | Accessories | Apparel | Aftermarket Parts | Contact Us | About Us | Bookmark

- Babbitt's Online Home
- Buy OEM Parts Online
- Buy Accessories Online
- New Vehicles
- Preowned Vehicles
- Company Info
- Maps / Hours
- Specials
- Financing
- View Cart
- Checkout

Search:
[Find Accessory] GO
enter sku or name and click "GO"

OEM PARTS

<<-- Pick New Model

Change Assembly: Rear Fender li

ZOOM IN | ZOOM OUT | ZOOM RESET

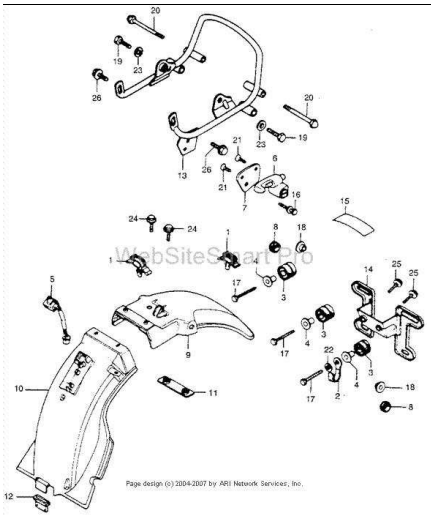

Tag	Description	Req	Price	
001	Clip, Wire Harness	1	$1.95 ea	Add to Cart
002	Clamp, Wire(Not Available)	1	$2.82 ea	Add to Cart
003	Rubber, Taillight Mount(Not Available)	3	$1.95 ea	Add to Cart
004	Collar, Taillight Mount(Not Available)	3	$2.94 ea	Add to Cart
005	Warning Assy., Stop(Not Available)	1	$105.95 ea	Add to Cart
006	Holder Assy., Helmet (Hondalock)	1	$32.26 ea	Add to Cart
006	Holder Assy., Helmet	1	$32.26 ea	Add to Cart
007	Plate, Helmet Holder(Not Available)	1	$6.28 ea	Add to Cart
008	Grommet B, Meter Case	2	$2.24 ea	Add to Cart
009	Fender, Rr.(Not Available)	1	$99.32 ea	Add to Cart
010	Fender B, Rr.(Not Available)	1	$58.68 ea	Add to Cart
011	Plate, Rr. Fender(Not Available)	1	$3.81 ea	Add to Cart

012	Rubber, Fender Cushion(Not Available)	1	$2.94 ea	Add to Cart
013	Bumper, Rr	1	$85.30 ea	Add to Cart
014	Bracket, License Plate(Not Available)	1	$86.65 ea	Add to Cart
015	Mark, Tire Caution(Not Available)	1	$3.56 ea	Add to Cart
015	Mark, Accessory #Amp; Loading Caution(Not Available)	1	$4.32 ea	Add to Cart
016	Bolt, Special (8x16mm)(Not Available)	1	$3.52 ea	Add to Cart
017	Bolt, Taillight(Not Available)	3	$2.79 ea	Add to Cart
018	Washer (6x20)	2	$1.95 ea	Add to Cart
019	Bolt, Hex. (8x20)	2	$1.95 ea	Add to Cart
020	Bolt, Cap (6x70)(Not Available)	2	$1.95 ea	Add to Cart
021	Screw, Pan (6x8)	2	$1.95 ea	Add to Cart
021	Screw, Pan (6x8)	2	$1.95 ea	Add to Cart
021	Screw, Pan (6x8)	2	$1.95 ea	Add to Cart
022	Washer, Plain (6mm)	1	$1.95 ea	Add to Cart
023	Washer, Plain (8mm)	2	$1.95 ea	Add to Cart
024	Bolt, Flange (6x16)	2	$1.95 ea	Add to Cart
025	Bolt, Flange (6x18)	2	$1.95 ea	Add to Cart
025	Bolt, Flange (6x18)	2	$1.95 ea	Add to Cart
026	Bolt, Flange (8x16)	2	$1.95 ea	Add to Cart
026	Bolt, Flange (8x16)	2	$1.95 ea	Add to Cart
NI	Bolt, Helmet Holder Setting	2	$1.95 ea	Add to Cart
NI	Bolt, Cap (8x80)(Source: Vintage Parts Inc.)	2	$2.14 ea	Add to Cart
NI	Bolt, Cap (8x80)	2	$2.18 ea	Add to Cart
NI	Nut, Flange (8mm)	2	$1.95 ea	Add to Cart

F27

BABBITT'S ONLINE

ALL BRANDS HONDA SUZUKI KAWASAKI SEA-DOO POLARIS ARCTIC CAT CAN-AM

BABBITT'S ONLINE.COM

» View Cart » Checkout » Email: Parts | Sales » (231) 737-4542 »

OEM Parts | Accessories | Apparel | Aftermarket Parts | Contact Us | About Us | Boo

» Babbitt's Online Home
» Buy OEM Parts Online
» Buy Accessories Online
» New Vehicles
» Preowned Vehicles
» Company Info
» Maps / Hours
» Specials
» Financing
» View Cart
» Checkout

Search:
[Find Accessory] GO
enter sku or name and click "GO"

» OEM PARTS

<<-- Pick New Model

Change Assembly: Turn Signal I

ZOOM IN ZOOM OUT

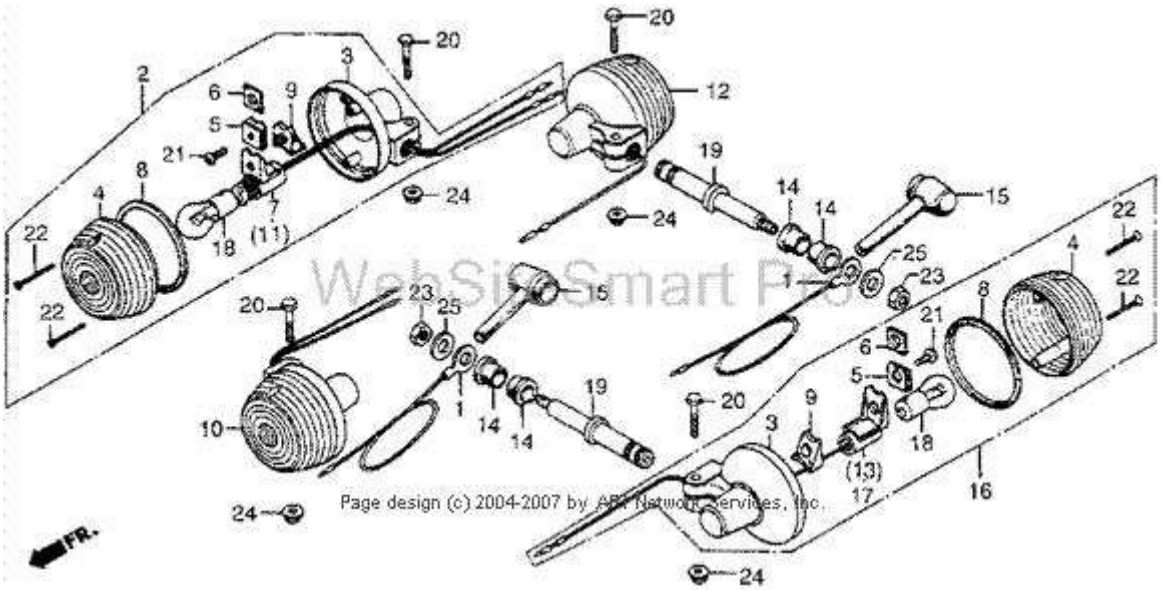

Tag	Description	Req	Price	
001	Sub-Wire a	2	$4.55	Add
002	Turn Signal Assy., R. Fr	1	$28.05	Add

003	Base, Turn Signal	2	$19.17	Add
004	Lens, Fr. Turn Signal (Stanley)	4	$3.94	Add
005	Plate, Ground(Not Available)	4	$2.06	Add
006	Rubber, Cushion(Not Available)	4	$1.95	Add
007	Socket, R. Turn Signal(Not Available)	1	$10.12	Add
008	Gasket, Turn Signal Lens	4	$1.95	Add
009	Rubber, Turn Signal Base Cushion(Not Available)	4	$2.97	Add
011	Socket, L. Turn Signal(Not Available)	1	$8.93	Add
012	Turn Signal Assy., R. Rr	1	$22.53	Add
013	Socket, R. Turn Signal	1	$11.20	Add
014	Rubber, Rr. Turn Signal Mount	4	$6.27	Add
016	Turn Signal Assy., L. Rr. (12v 23w)	1	$22.53	Add
017	Socket, L. Turn Signal	1	$11.20	Add
018	Bulb (12v23/7w) (1034)	2	$2.90	Add
018	Bulb, Turn Signal (12v23w32cp)(1073) (Stanley)	2	$1.95	Add
018	Bulb, Stop #Amp; Taillight (12v23/8w) (Stanley)	2	$2.90	Add
019	Bolt, Rr. Turn Signal	2	$13.74	Add
020	Bolt, Hex. (6x25)	4	$1.95	Add
021	Screw, Pan (5x8)	4	$1.95	Add
022	Screw, Oval (3x25)	8	$1.95	Add
023	Nut, Hex. (10mm)	2	$1.95	Add
024	Nut, Flange (6mm)	4	$1.95	Add
025	Washer, Plain (10mm)	2	$1.95	Add

F2701

BABBITT'S ONLINE

ALL BRANDS | HONDA | SUZUKI | KAWASAKI | SEA-DOO | POLARIS | ARCTIC CAT | CAN-AM | HELMETS

BABBITT'S ONLINE.COM

» View Cart » Checkout » Email: Orders | Sales » (231) 737-4542 »

OEM Parts | Accessories | Apparel | Aftermarket Parts | Contact Us | About Us | Bookmark

» Babbitt's Online Home
» Buy OEM Parts Online
» Buy Accessories Online
» New Vehicles
» Preowned Vehicles
» Company Info
» Maps / Hours
» Specials
» Financing
» View Cart
» Checkout

Search:
[Find Accessory] GO
enter sku or name and click "GO"

» OEM PARTS

<<-- Pick New Model

Change Assembly: Turn Signal Ii

ZOOM IN ZOOM OUT ZOOM RESET

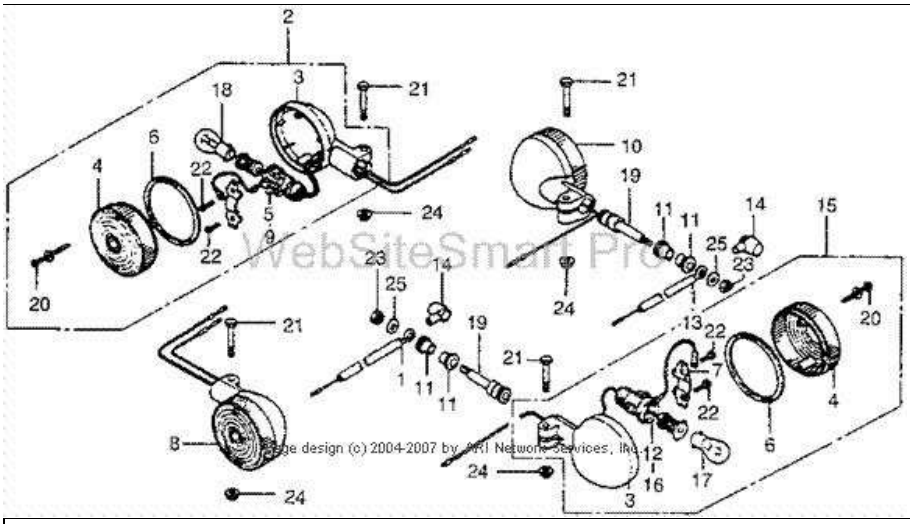

Tag	Description	Req	Price	
001	Sub-Wire a(Not Available)	1	$4.22 ea	Add to Cart
001	Wire B, Turn Signal Ground(Not Available)	1	$3.86 ea	Add to Cart
002	Turn Signal Assy., R. Fr	1	$44.79 ea	Add to Cart
003	Base, R. Fr. Turn Signal(Not Available)	4	$37.94 ea	Add to Cart
004	Lens, Fr. Turn Signal	4	$13.04 ea	Add to Cart
006	Gasket, Turn Signal Lens	4	$3.27 ea	Add to Cart
007	Holder, Fr. Turn Signal Socket(Not Available)	4	$1.95 ea	Add to Cart
010	Turn Signal, R. Rr	1	$68.74 ea	Add to Cart
011	Rubber, Rr. Turn Signal Setting	4	$1.99 ea	Add to Cart
012	Socket, R. Turn Signal(Not Available)	1	$11.53 ea	Add to Cart
014	Cover, Ground Terminal(Not Available)	2	$1.95 ea	Add to Cart
015	Turn Signal Assy., L. Rr.(Not Available)	1	$67.26 ea	Add to Cart

016	Socket, L. Turn Signal(Not Available)	1	$16.74 ea	Add to Cart
017	Bulb, Turn Signal (12v23w32cp)(1073) (Stanley)	2	$1.95 ea	Add to Cart
018	Bulb (12v23/7w) (1034)	2	$2.90 ea	Add to Cart
018	Bulb, Stop #Amp; Taillight (12v23/8w) (Stanley)	2	$2.90 ea	Add to Cart
019	Bolt, Rr. Turn Signal	2	$24.36 ea	Add to Cart
020	Screw, Pan (4x25)	8	$1.95 ea	Add to Cart
021	Bolt, Hex. (6x35)	4	$1.95 ea	Add to Cart
022	Screw, Pan (3x8)	8	$1.95 ea	Add to Cart
023	Nut, Hex. (10mm)	2	$1.95 ea	Add to Cart
024	Nut, Flange (6mm)	4	$1.95 ea	Add to Cart
025	Washer, Plain (10mm)	2	$1.95 ea	Add to Cart

Babbitts Sports Center
3712 Airline Rd.
Muskegon MI 49444
Phone: 231-737-4542
Email:
orderinfo@babbittsonline.com

F28

BABBITT'S ONLINE

ALL BRANDS HONDA SUZUKI KAWASAKI SEA-DOO POLARIS ARCTIC CAT CAN-AM

BABBITT'S ONLINE.COM

» View Cart » Checkout » Email: Parts | Sales » (231) 737-4542 »

OEM Parts | Accessories | Apparel | Aftermarket Parts | Contact Us | About Us | Boo

» Babbitt's Online Home
» Buy OEM Parts Online
» Buy Accessories Online
» New Vehicles
» Preowned Vehicles
» Company Info
» Maps / Hours
» Specials
» Financing
» View Cart
» Checkout

Search:
[Find Accessory] GO
enter sku or name and click "GO"

» OEM PARTS

<<-- Pick New Model

Change Assembly: Taillight I

ZOOM IN ZOOM OUT

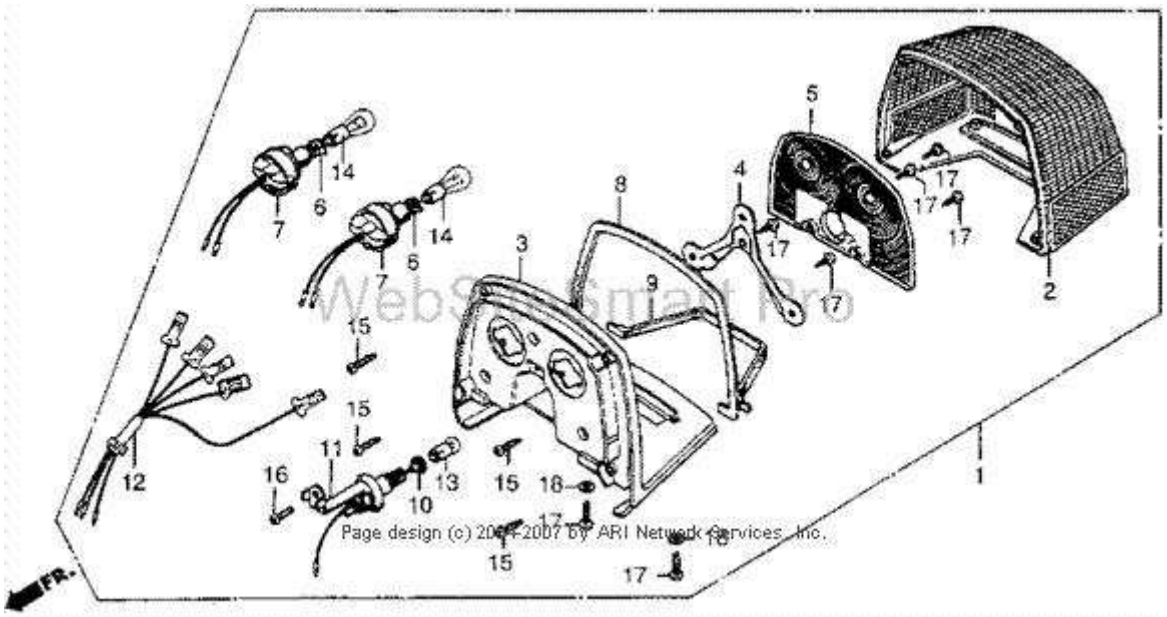

Tag	Description	Req	Price	
001	Taillight Assy. (Stanley)(Not Available)	1	$154.90	Add
002	Lens, Taillight(Not Available)	1	$27.54	Add

003	Base, Taillight(Not Available)	1	$59.70	Add
004	Stay, Taillight(Not Available)	1	$11.24	Add
005	Lens, Taillight Sub(Not Available)	1	$9.76	Add
006	Cable, Taillight	2	$6.91	Add
007	Socket, Stop #Amp; Taillight(Not Available)	2	$10.18	Add
008	Gasket a, Taillight Lens(Not Available)	1	$3.68	Add
009	Gasket B, Taillight Lens(Not Available)	1	$2.84	Add
010	Wire, License Light	1	$7.46	Add
011	Socket, License Light(Not Available)	1	$13.66	Add
012	Sub-Wire, Taillight(Not Available)	1	$12.74	Add
013	Bulb (12v8w4cp) (67) (Stanley)	1	$1.95	Add
014	Bulb, Taillight (12v27/7w) (2057hd) (Stanley)	2	$1.95	Add
015	Screw, Pan (4x10)	1	$1.95	Add
016	Screw, Tapping (4x12)	5	$1.95	Add
017	Screw, Tapping (4x16)	6	$1.95	Add
018	Washer, Plain (4mm)	2	$1.95	Add

F2801

BABBITT'S ONLINE

ALL BRANDS | HONDA | SUZUKI | KAWASAKI | SEA-DOO | POLARIS | ARCTIC CAT | CAN-AM | HELMETS

BABBITT'S ONLINE.COM

» View Cart » Checkout » Email: Orders | Sales » (231) 737-4542 »

OEM Parts | Accessories | Apparel | Aftermarket Parts | Contact Us | About Us | Bookmark

» Babbitt's Online Home
» Buy OEM Parts Online
» Buy Accessories Online
» New Vehicles
» Preowned Vehicles
» Company Info
» Maps / Hours
» Specials
» Financing
» View Cart
» Checkout

Search:
[Find Accessory] GO
enter sku or name and click "GO"

» OEM PARTS

<<-- Pick New Model

Change Assembly: Taillight li

ZOOM IN ZOOM OUT ZOOM RESET

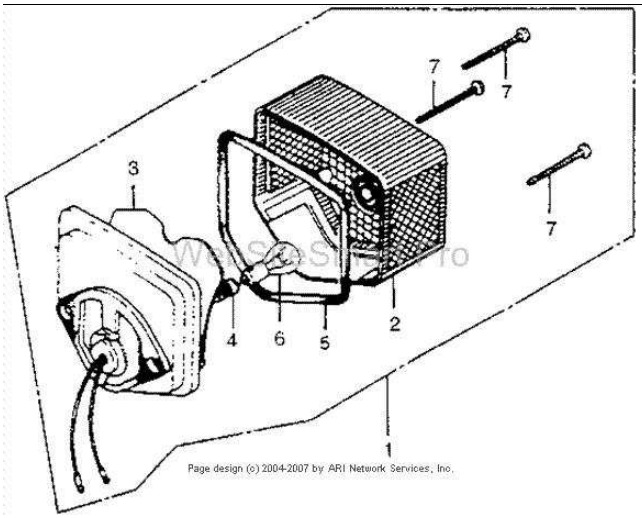

Tag	Description	Req	Price	
001	Taillight Unit(Not Available)	1	$35.62 ea	Add to Cart
002	Lens, Taillight	1	$14.70 ea	Add to Cart
003	Base, Taillight(Not Available)	1	$20.10 ea	Add to Cart
004	Wire, Taillight	1	$5.31 ea	Add to Cart
005	Gasket, Taillight Lens	1	$1.95 ea	Add to Cart
006	Bulb, Taillight (12v27/7w) (2057hd) (Stanley)	1	$1.95 ea	Add to Cart
007	Screw, Pan (4x55)	3	$1.95 ea	Add to Cart
NI	Wire, Taillight(Not Available)	1	$12.46 ea	Add to Cart
NI	Gasket B, Taillight Base(Not Available)	2	$2.56 ea	Add to Cart
NI	Collar, Battery Box	2	$2.06 ea	Add to Cart
NI	Rubber, Rr. Fender Cushion	3	$2.28 ea	Add to Cart
NI	Bracket, License Plate(Not Available)	1	$86.65 ea	Add to Cart

NI	Washer (20mm)	2	$1.95 ea	Add to Cart
NI	Bolt, Hex. (5x25)	2	$1.95 ea	Add to Cart
NI	Nut, Flange (6mm)	3	$1.95 ea	Add to Cart

Babbitts Sports Center
3712 Airline Rd.
Muskegon MI 49444
Phone: 231-737-4542
Email:
orderinfo@babbittsonline.com

Terms And Conditions | Privacy Policy
Powered by ARI Network Services - WebsiteSmart Pro v1.0.5
(c)2003-2007

F29

BABBITT'S ONLINE

ALL BRANDS HONDA SUZUKI KAWASAKI SEA-DOO POLARIS ARCTIC CAT CAN-AM

BABBITT'S ONLINE.COM

» View Cart » Checkout » Email: Parts | Sales » (231) 737-4542 »

OEM Parts | Accessories | Apparel | Aftermarket Parts | Contact Us | About Us | Boo

» Babbitt's Online Home
» Buy OEM Parts Online
» Buy Accessories Online
» New Vehicles
» Preowned Vehicles
» Company Info
» Maps / Hours
» Specials
» Financing
» View Cart
» Checkout

Search:
[Find Accessory] GO
enter sku or name and click "GO"

» OEM PARTS

<<-- Pick New Model

Change Assembly: Wire Harness @ Ignition Coil

ZOOM IN ZOOM OUT

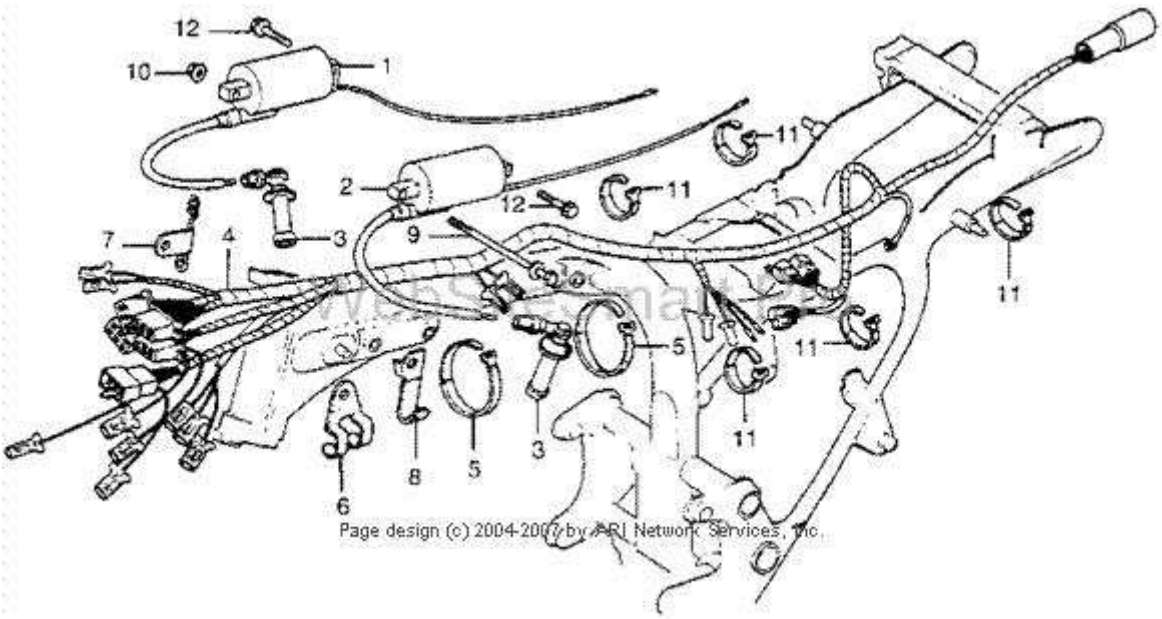

Tag	Description	Req	Price	
001	Coil Assy., R. Ignition (Toyo)(Not Available)	1	$63.35	Add
002	Coil Assy., L. Ignition	1	$65.14	Add

003	Cap Assy., Noise Suppressor	2	$19.90	Add
003	Cap Assy. a, Noise Suppressor	2	$19.90	Add
004	Wire Harness(Not Available)	1	$148.87	Add
005	Band, Cable	2	$2.82	Add
006	Clip, Wire Harness	1	$4.83	Add
007	Clip, Clutch Cable(Not Available)	1	$4.86	Add
008	Clip, Throttle Cable	1	$4.26	Add
009	Bolt-Washer (6x145)(Not Available)	1	$5.44	Add
010	Nut, Flange (6mm)	1	$1.95	Add
011	Band A2, Cable	5	$1.95	Add
012	Bolt, Flange (6x16)	2	$1.95	Add

Babbitts Sports Center

3712 Airline Rd.
Muskegon MI 49444
Phone: 231-737-4542

Terms And Conditions | Privacy Policy
Powered by ARI Network Services - WebsiteSmart Pro
(c)2003-2007

F30

BABBITT'S ONLINE

ALL BRANDS HONDA SUZUKI KAWASAKI SEA-DOO POLARIS ARCTIC CAT CAN-AM

BABBITT'S ONLINE.COM

» View Cart » Checkout » Email: Parts | Sales » (231) 737-4542 »

OEM Parts | Accessories | Apparel | Aftermarket Parts | Contact Us | About Us | Boo

» Babbitt's Online Home
» Buy OEM Parts Online
» Buy Accessories Online
» New Vehicles
» Preowned Vehicles
» Company Info
» Maps / Hours
» Specials
» Financing
» View Cart
» Checkout

Search:
[Find Accessory] GO
enter sku or name and click "GO"

» OEM PARTS

<<-- Pick New Model

Change Assembly: Radiator Shroud @ Reserve Tan

ZOOM IN ZOOM OUT

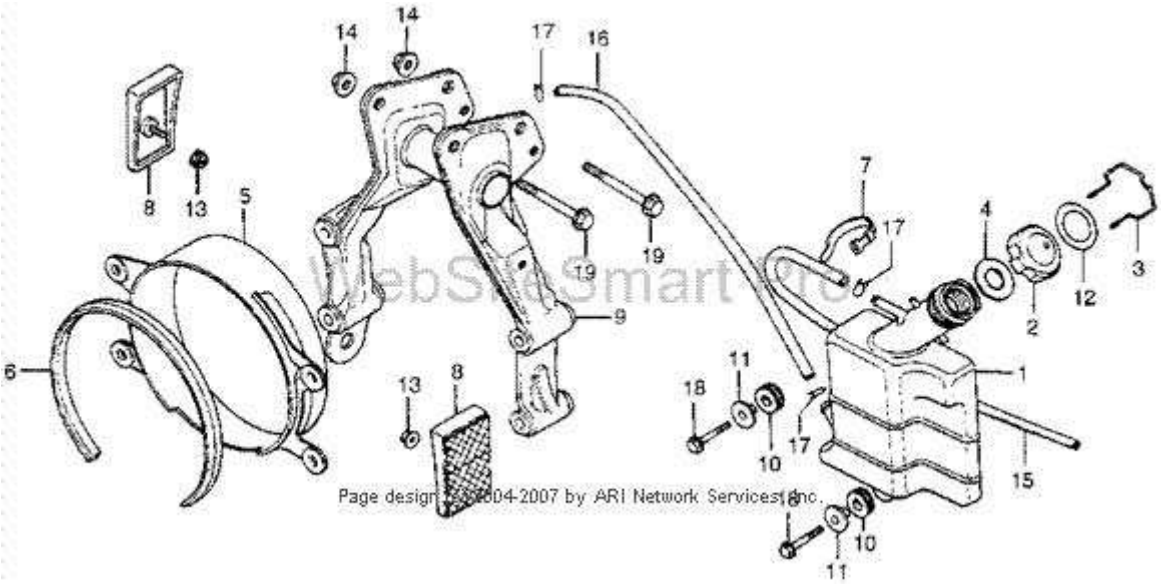

Tag	Description	Req	Price	
001	Tank, Reserve(Not Available)	1	$25.88	Add
002	Cap, Reserve Tank(Not Available)	1	$6.06	Add

003	Cable, Cap Lock(Not Available)	1	$1.95	Add
004	Gasket, Reserve Tank	1	$1.95	Add
005	Shroud, Radiator(Not Available)	1	$49.44	Add
006	Gasket, Radiator Shroud(Not Available)	1	$8.14	Add
007	Band B1, Cable	1	$1.95	Add
008	Reflector, Fr. Reflex (Stanley)(Not Available)	2	$16.20	Add
009	Bracket, Fr. Engine Hanger	1	$234.18	Add
010	Rubber, Fr. Fender Setting	2	$1.95	Add
011	Collar, Fr. Fender	2	$3.02	Add
011	Collar, Rr. Fender	2	$3.02	Add
012	Label, Reserve Tank(Not Available)	1	$2.76	Add
013	Nut, Flange (6mm)	2	$1.95	Add
014	Nut, Flange (10mm)	2	$1.95	Add
015	Bulk Hose, Fuel (7.5x8000)Oem Cut Size: (7.3x500)	1	$43.02	Add
017	Clip, Tube (B12)	3	$1.95	Add
018	Bolt, Flange (6x20)	2	$1.95	Add
019	Bolt, Flange (10x115)(Source: Vintage Parts Inc.)	2	$1.95	Add

F31

BABBITT'S ONLINE

ALL BRANDS HONDA SUZUKI KAWASAKI SEA-DOO POLARIS ARCTIC CAT CAN-AM

BABBITT'S ONLINE.COM

» View Cart » Checkout » Email: Parts | Sales » (231) 737-4542 »

OEM Parts | Accessories | Apparel | Aftermarket Parts | Contact Us | About Us | Boo

» Babbitt's Online Home
» Buy OEM Parts Online
» Buy Accessories Online
» New Vehicles
» Preowned Vehicles
» Company Info
» Maps / Hours
» Specials
» Financing
» View Cart
» Checkout

Search:
[Find Accessory] GO
enter sku or name and click "GO"

» OEM PARTS

<<-- Pick New Model

Change Assembly: Frame

ZOOM IN ZOOM OUT

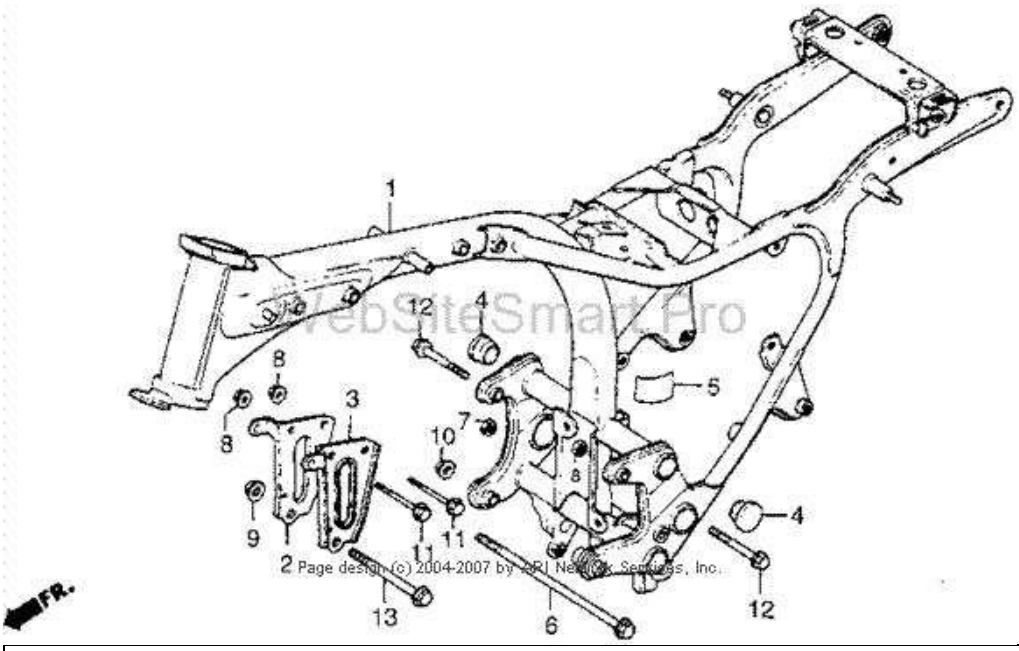

Tag	Description	Req	Price	
001	Frame *Nh1*(Black)	1	$883.39	Add
001	Frame *Nh1*(Black)	1	$883.39	cal

002	Plate, R. Engine Hanger Center(Not Available)	1	$18.56	Add
003	Plate, L. Engine Hanger Center	1	$21.54	Add
004	Cap, Crossmember Side	2	$1.95	Add
005	Mark, Battery Caution(Not Available)	1	$2.40	Add
006	Bolt, Flange (12x308)	1	$23.50	Add
007	Nut, Hex. (10mm)	2	$1.95	Add
008	Nut, Flange (8mm)	2	$1.95	Add
009	Nut, Flange (10mm)	1	$1.95	Add
010	Nut, Flange (12mm)	1	$1.95	Add
011	Bolt, Flange (8x100)	2	$1.95	Add
011	Bolt, Flange (8x100)	2	$1.95	Add
012	Bolt, Flange (10x70)	2	$1.95	Add
013	Bolt, Flange (10x115)(Source: Vintage Parts Inc.)	1	$1.95	Add

Babbitts Sports Center
3712 Airline Rd.
Muskegon MI 49444
Phone: 231-737-4542

F32

» OEM PARTS

<<-- Pick New Model

Change Assembly: Tools

ZOOM IN ZOOM OUT

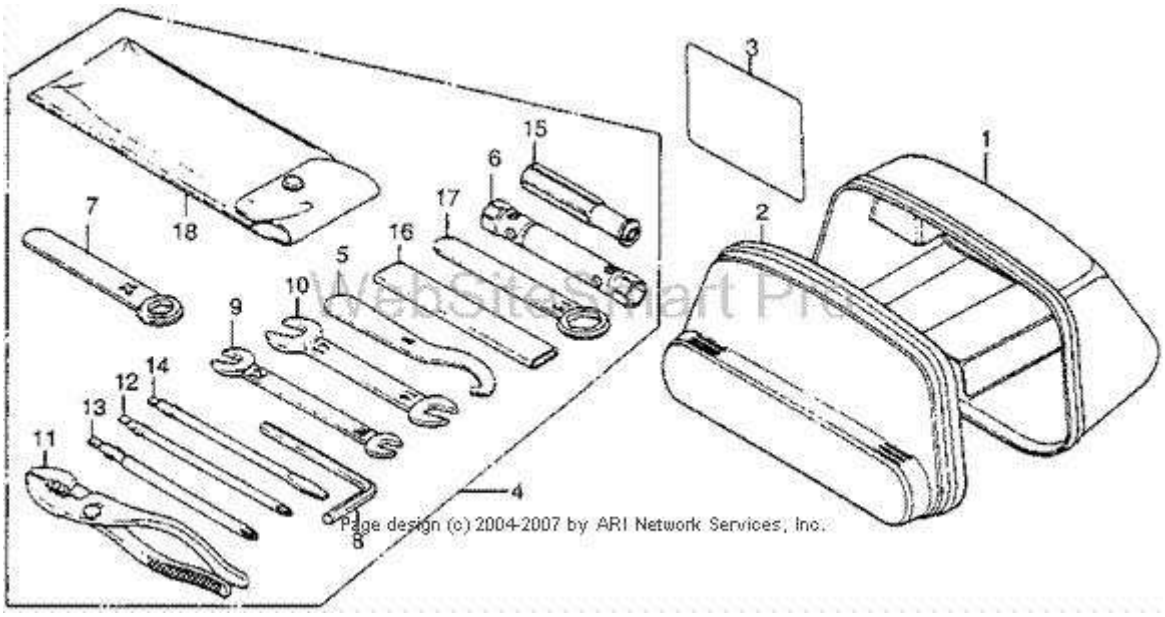

Tag	Description	Req	Price	
001	Case a, Tool(Not Available)	1	$29.72	Add
002	Case B, Tool(Not Available)	1	$15.18	Add

003	Label, Accessories #Amp; Loading Caution(Not Available)	1	$2.74	Add
004	Tool Set(Not Available)	1	$18.30	Add
005	Wrench, Pin	1	$3.14	Add
006	Wrench, Box (18.5x17)	1	$7.22	Add
008	Wrench, Hex. (6mm)	1	$1.95	Add
009	Wrench (10x12) (Open End)	1	$1.95	Add
010	Wrench (14x17) (Open End)	1	$2.14	Add
011	Pliers (135mm)	1	$3.02	Add
012	Screwdriver 1, Phillips (No.2)	1	$1.95	Add
013	Screwdriver 2, Phillips (No.3)	1	$1.95	Add
014	Screwdriver 3, Straight Slot (No.2)	1	$1.95	Add
015	Grip	1	$1.95	Add
016	Handle, Eye Wrench (120mm)	1	$1.99	Add
017	Wrench, Eye (19mm)	1	$2.66	Add
018	Bag, Tool	1	$3.64	Add